# KE-430D
# BE-438D

SERVICE MANUAL


Please read this manual before using the machine.
Please keep this manual within easy reach for quick reference.

ELECTRONIC DIRECT DRIVE LOCKSTITCH BAR TACKER
ELECTRONIC DIRECT DRIVE LOCKSTITCH BUTTON SEWER

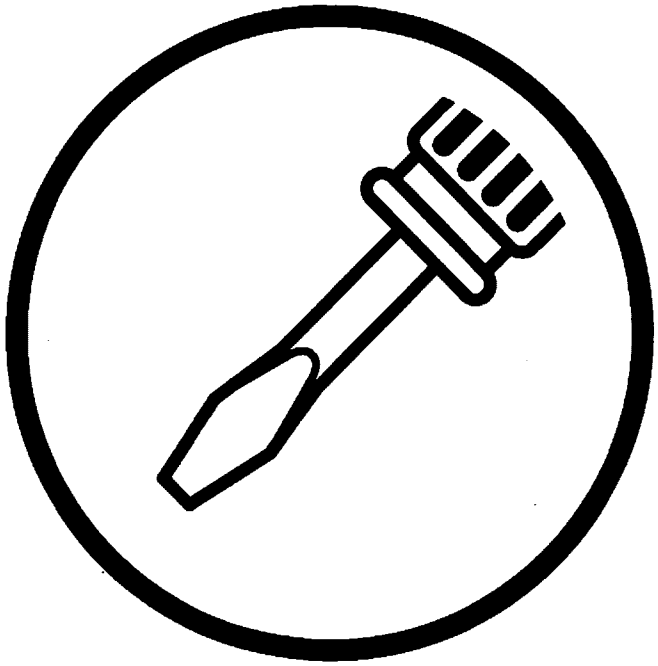

brother®

This service manual is intended for KE-430D, BE-438D; be sure to read the KE-430D, BE-438D instruction manual before this manual.
Carefully read the "SAFETY INSTRUCTIONS" below and the whole of this manual to understand this product before you start maintenance.

As a result of research and improvements regarding this product, some details of this manual may not be the same as those for the product you purchased.
If you have any questions regarding this product, please contact a Brother dealer.

# SAFETY INSTRUCTIONS

## 1. Safety indications and their meanings

This service manual and the indications and symbols that are used on the machine itself are provided in order to ensure safe operation of this machine and to prevent accidents and injury to yourself or other people.
The meanings of these indications and symbols are given below.

### Indications

| | |
|---|---|
| ⚠ DANGER | The instructions which follow this term indicate situations where failure to follow the instructions will almost certainly result in death or severe injury. |
| ⚠ CAUTION | The instructions which follow this term indicate situations where failure to follow the instructions could cause injury when using the machine or physical damage to equipment and surroundings. |

### Symbols


..... This symbol (△) indicates something that you should be careful of. The picture inside the triangle indicates the nature of the caution that must be taken.
(For example, the symbol at left means "beware of injury".)


..... This symbol (⃠) indicates something that you <u>must not</u> do.


..... This symbol (●) indicates something that you <u>must</u> do. The picture inside the circle indicates the nature of the thing that must be done.
(For example, the symbol at left means "you must make the ground connection".)

## 2. Notes on safety

### ⚠ DANGER

Wait at least 5 minutes after turning off the power switch and disconnecting the power cord from the wall outlet before opening the face plate of the control box. Touching areas where high voltages are present can result in severe injury.

### ⚠ CAUTION

#### Environmental requirements

- Use the sewing machine in an area which is free from sources of strong electrical noise such as high-frequency welders.
  Sources of strong electrical noise may cause problems with correct operation.
- Any fluctuations in the power supply voltage should be within ±10% of the rated voltage for the machine.
  Voltage fluctuations which are greater than this may cause problems with correct operation.
- The power supply capacity should be greater than the requirements for the sewing machine's electrical consumption.
  Insufficient power supply capacity may cause problems with correct operation.
- The ambient temperature should be within the range of 5°C to 35°C during use.
  Temperatures which are lower or higher than this may cause problems with correct operation.
- The relative humidity should be within the range of 45% to 85% during use, and no dew formation should occur in any devices.
  Excessively dry or humid environments and dew formation may cause problems with correct operation.
- Avoid exposure to direct sunlight during use.
  Exposure to direct sunlight may cause problems with correct operation.
- In the event of an electrical storm, turn off the power and disconnect the power cord from the wall outlet.
  Lightning may cause problems with correct operation.

#### Installation

- Machine installation should only be carried out by a qualified technician.
- Contact your Brother dealer or a qualified electrician for any electrical work that may need to be done.
- The sewing machine weighs approximately 56 kg. The installation should be carried out by two or more people.
- Do not connect the power cord until installation is complete, otherwise the machine may operate if the foot switch is depressed by mistake, which could result in injury.
- Hold the machine head with both hands when tilting it back or returning it to its original position.
  Furthermore, after tilting back the machine head, do not push the face plate side or the pulley side from above, as this could cause the machine head to topple over, which may result in personal injury or damage to the machine.
- Be sure to connect the ground. If the ground connection is not secure, you run a high risk of receiving a serious electric shock, and problems with correct operation may also occur.
- All cords should be secured at least 25 mm away from any moving parts. Furthermore, do not excessively bend the cords or secure them too firmly with staples, otherwise there is the danger that fire or electric shocks could occur.
- Install the safety covers to the machine head and motor.
- If using a work table which has casters, the casters should be secured in such a way so that they cannot move.
- Be sure to wear protective goggles and gloves when handling the lubricating oil and grease, so that they do not get into your eyes or onto your skin, otherwise inflammation can result.
  Furthermore, do not drink the oil or eat the grease under any circumstances, as they can cause vomiting and diarrhoea.
  Keep the oil out of the reach of children.

# ⚠ CAUTION

## Sewing

This sewing machine should only be used by operators who have received the necessary training in safe use beforehand.

The sewing machine should not be used for any applications other than sewing.

Be sure to wear protective goggles when using the machine.
If goggles are not worn, there is the danger that if a needle breaks, parts of the broken needle may enter your eyes and injury may result.

Turn off the power switch at the following times, otherwise the machine may operate if the foot switch is depressed by mistake, which could result in injury.

- When threading the needle
- When replacing the needle and bobbin
- When not using the machine and when leaving the machine unattended

If using a work table which has casters, the casters should be secured in such a way so that they cannot move.

Attach all safety devices before using the sewing machine. If the machine is used without these devices attached, injury may result.

Do not touch any of the moving parts or press any objects against the machine while sewing, as this may result in personal injury or damage to the machine.

If an error occurs in machine operation, or if abnormal noises or smells are noticed, immediately turn off the power switch. Then contact your nearest Brother dealer or a qualified technician.

If the machine develops a problem, contact your nearest Brother dealer or a qualified technician.

## Cleaning

Turn off the power switch before carrying out cleaning, otherwise the machine may operate if the foot switch is depressed by mistake, which could result in injury.

Be sure to wear protective goggles and gloves when handling the lubricating oil and grease, so that they do not get into your eyes or onto your skin, otherwise inflammation can result.
Furthermore, do not drink the oil or eat the grease under any circumstances, as they can cause vomiting and diarrhoea.
Keep the oil out of the reach of children.

## Maintenance and inspection

Maintenance and inspection of the sewing machine should only be carried out by a qualified technician.

Ask your Brother dealer or a qualified electrician to carry out any maintenance and inspection of the electrical system.

Turn off the power switch and disconnect the power cord from the wall outlet at the following times, otherwise the machine may operate if the foot switch is depressed by mistake, which could result in injury.

- When carrying out inspection, adjustment and maintenance
- When replacing consumable parts such as the rotary hook

If the power switch needs to be left on when carrying out some adjustment, be extremely careful to observe all safety precautions.

Hold the machine head with both hands when tilting it back or returning it to its original position.
Furthermore, after tilting back the machine head, do not push the face plate side or the pulley side from above, as this could cause the machine head to topple over, which may result in personal injury or damage to the machine.

Use only the proper replacement parts as specified by Brother.

If any safety devices have been removed, be absolutely sure to re-install them to their original positions and check that they operate correctly before using the machine.

Any problems in machine operation which result from unauthorized modifications to the machine will not be covered by the warranty.

## 3. Warning labels

The following warning labels appear on the sewing machine.
Please follow the instructions on the labels at all times when using the machine. If the labels have been removed or are difficult to read, please contact your nearest Brother dealer.

1

| ⚠ 危 険 | | ⚠ 危 险 | |
|---|---|---|---|
| 高電圧部分にふれて、大けがをすることがある。電源を切り、5分たってからカバーをはずすこと。 | | 触摸高压电部分，会导致受伤。在切断电源5分钟后，再开启盖罩。 | |
| ⚠ DANGER | ⚠ GEFAHR | ⚠ DANGER | ⚠ PELIGRO |
| Hazardous voltage will cause injury. Turn off main switch and wait 5minutes before opening this cover. | Hochspannung verletzungsgefahr! Bitte schalten sie den hauptschalter aus und warten sie 5 minuten, bevor sie diese abdeckung öffnen. | Un voltage non adapte provoque des blessures. Eteindre l'interrupteur et attendre 5 minutes avant d'ouvrir le capot. | Un voltaje inadecuado puede provocar las heridas.Apagar el interruptor principal y esperar 5 minutos antes de abrir esta cubierta. |

2

⚠ 注 意

動く部分でけがをする。
安全保護装置をつけて、縫製作業をすること。電源を切ってから、糸通し、ボビンや針の交換、掃除や調整をすること。

⚠ CAUTION

Moving parts may cause injury. Operate with safety devices. Turn off main switch before threading, changing bobbin and needle, cleaning etc.

Safety devices

- Eye guard
- Finger guard
- Tension release solenoid cover
- Thread take-up cover
- Frame side cover
- Back cover, etc.

3 PE

Be sure to connect the ground. If the ground connection is not secure, you run a high risk of receiving a serious electric shock, and problems with correct operation may also occur.

4

Direction of operation

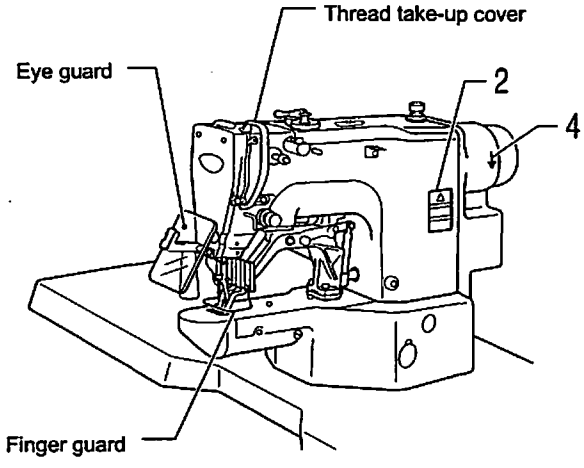


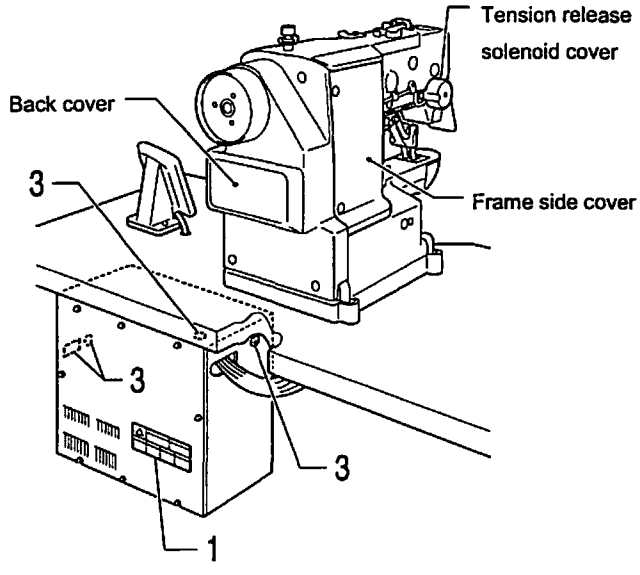


4399Q

4467Q

# CONTENTS

# 1. SPECIFICATIONS

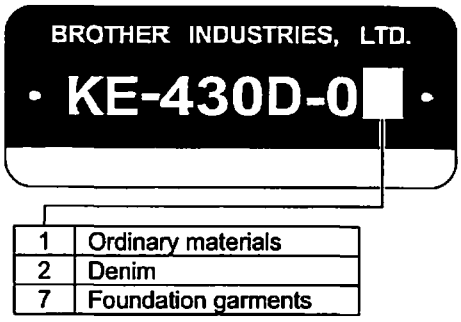



| | |
|---|---|
| 1 | Ordinary materials |
| 2 | Denim |
| 7 | Foundation garments |

| | KE-430D<br>Electronic direct drive lockstitch bar tacker | BE-438D<br>Electronic direct drive lockstitch button sewer |
|---|---|---|
| Stitch formation | Single needle lock stitch | |
| Maximum sewing speed | 3,200 rpm | 2,700 rpm |
| Pattern size (X x Y) | 40 x 30 mm max. | 6.4 x 6.4 mm max. |
| Dimensions of buttons that can be sewn | | Outer diameter of button 8 - 30 mm (Use the optional button clamp B for diameters of 20 mm or greater.) |
| Feed mechanism | Y-θ intermittent feed mechanism (pulse-motor driven mechanism) | |
| Stitch length | 0.1 - 12.7 mm | |
| Number of stitches | Variable (Refer to "Program List" for details on the number of stitches for sewing patterns that are already preset.) | |
| Maximum stitch number | 210,000 stitches (including 200,000 stitches which can be added) | |
| Work clamp lifter | Pulse-motor driven mechanism | |
| Work clamp height<br>Button clamp height | 17 mm max. | 13 mm max. |
| Rotary hook | Shuttle hook (shuttle hook 2, optional) | Shuttle hook |
| Wiper device | Standard equipment | |
| Thread trimmer device | Standard equipment | |
| Thread nipper device | Standard equipment | |
| Data storage method | Flash memory (Any sewing pattern can be added using CF card) | |
| Number of user programs | 50 | |
| Number of cycle programs | 9 | |
| Number of stored data | 89 sewing patterns are set already | 49 sewing patterns are set already |
| | (Up to 200 patterns can be added. Total number of stitches of stored data which can be added is within 200,000.) | |
| Motor | AC servo motor 550 W | |
| Weights | Machine head: approx. 56 kg, Operation panel: approx. 0.6 kg<br>Control box: 14.2 – 16.2 kg (depending on destination) | |
| Power source | Single-phase 100V / 220V, 3-phase 200V / 220V / 380V / 400V 400VA | |

# 2. FUNCTION SETTINGS

## 2-1. List of special functions when power is turned on

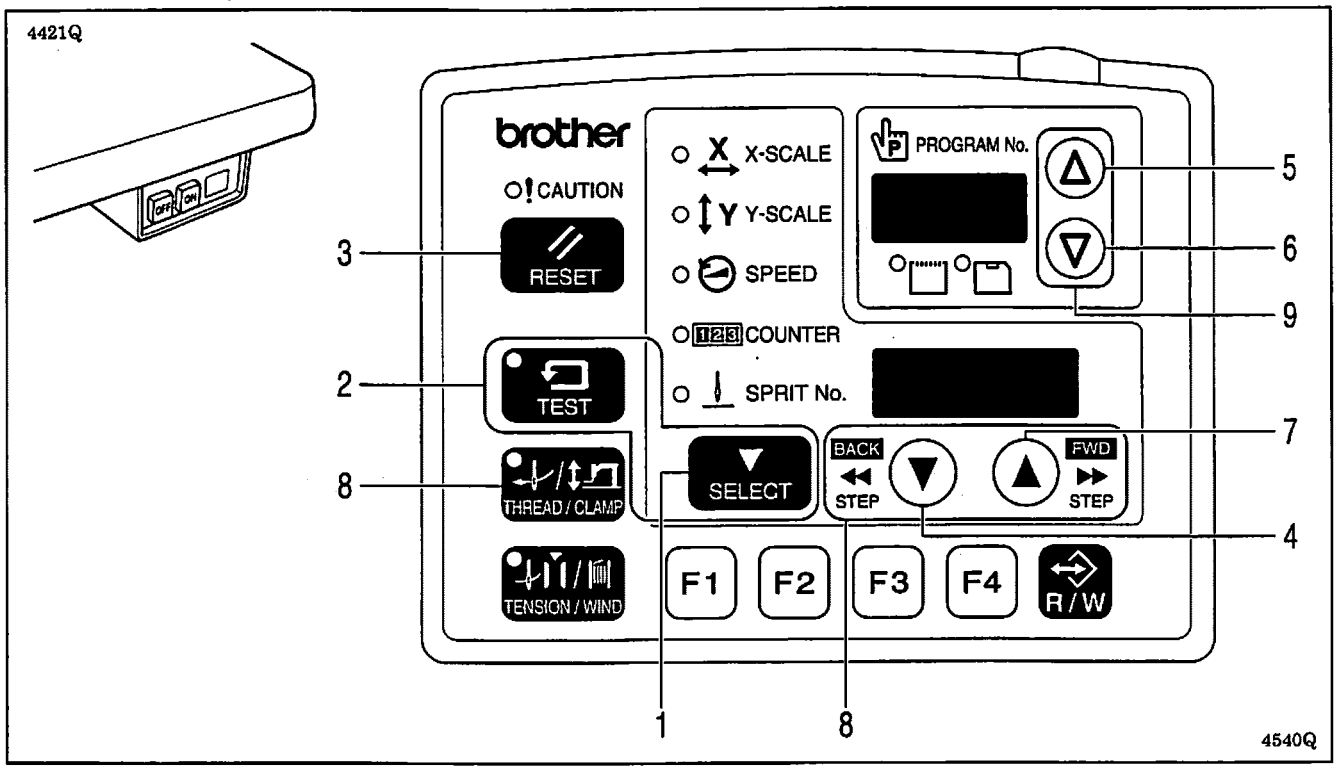


| | | | |
|---|---|---|---|
| 1 | **Memory switch setting mode (Standard)**<br>SELECT + ON 4541Q<br>Refer to the Instruction Manual. | 6 | **Output check function**<br>▽ + ON 4546Q<br>Refer to "2-10. Output checking method". |
| 2 | **Memory switch setting mode (Advanced)**<br>TEST + SELECT + ON 4542Q<br>Refer to "2-3. Setting memory switches (Advanced)". | 7 | **Software version display function**<br>▲ FWD STEP + ON 4547Q<br>Refer to "2-11. Confirming software version". |
| 3 | **Data initialization function**<br>RESET + ON 4543Q<br>Refer to "2-7. Clearing saved data (Initialization)". | 8 | **Home position adjusting mode**<br>BACK STEP ▼ ▲ FWD STEP + ON 4548Q<br>Refer to "7-17. Adjusting the home position". |
| 4 | **Error log display function**<br>BACK STEP ▼ + ON 4544Q<br>Refer to "2-8. Checking the error history". | 9 | **Needle up stop position adjusting mode**<br>△ ▽ + ON 4549Q<br>Refer to "7-20. Adjusting the needle up stop position". |
| 5 | **Input check function**<br>△ + ON 4545Q<br>Refer to "2-9. Input checking method". | | |

## 2-2. List of advanced functions

While holding down the TEST key, press the corresponding combination key.

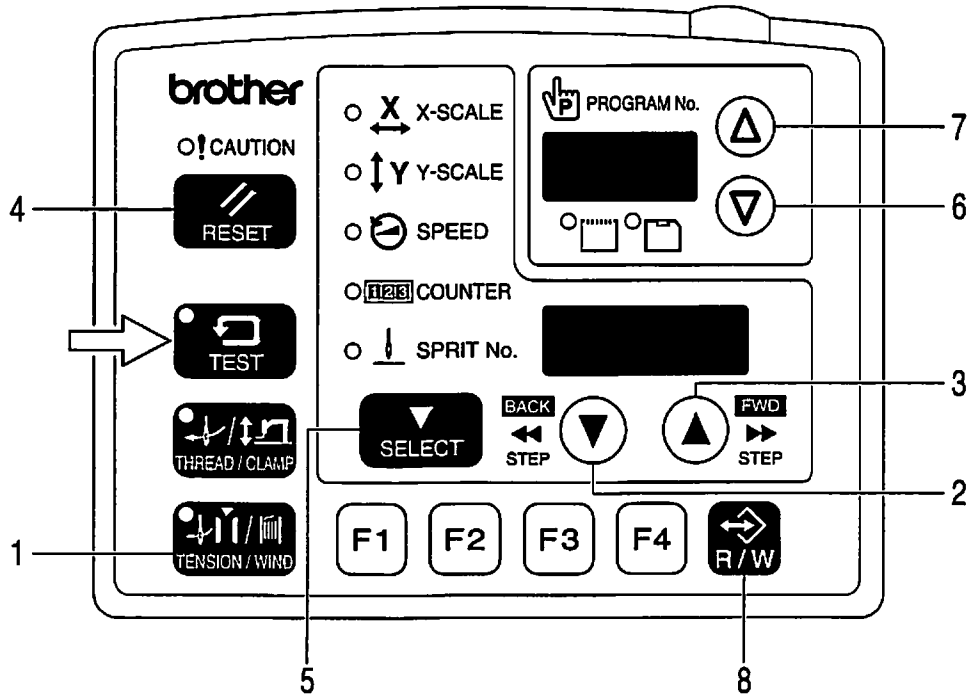


4550Q

| | | | |
|---|---|---|---|
| 1 | **Memory switch setting mode (Standard)**<br>TEST + TENSION / WIND 4489Q<br>Refer to the Instruction Manual. | 5 | **User program setting mode**<br>TEST + SELECT 4493Q<br>Refer to the Instruction Manual. |
| 2 | **Lower thread counter setting mode**<br>TEST + BACK STEP ▼ 4490Q<br>Refer to the Instruction Manual. | 6 | **Parallel movement mode**<br>TEST + ▽ 4551Q<br>Refer to "2-6. X-Y parallel movement for sewing patterns". |
| 3 | **Production counter setting mode**<br>TEST + ▲ FWD STEP 4491Q<br>Refer to the Instruction Manual. | 7 | **Grease up counter setting mode**<br>TEST + △ 4552Q<br>Refer to "8. Applying grease". |
| 4 | **Production counter temporary display function**<br>When the SPEED indicator lights<br>TEST + RESET 4492Q<br>Refer to the Instruction Manual. | 8 | **CF data read/write mode**<br>TEST + R / W 4553Q<br>Refer to "3-3. Preparation for reading and writing data". |

## 2-3. Setting memory switches (Advanced)

**1**

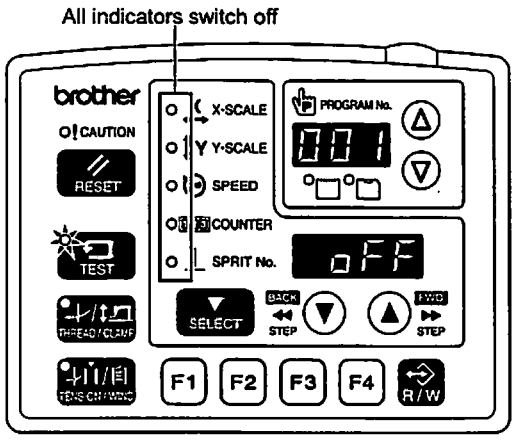


While pressing the TEST key and SELECT key, turn on the power switch.
* Keep pressing the TEST key and SELECT key until the model name is displayed and the buzzer beeps once.

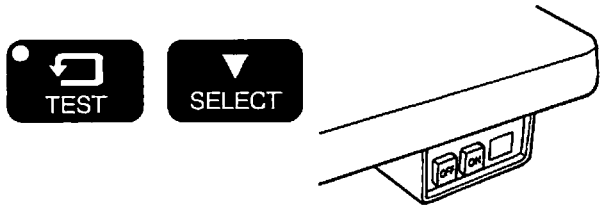


- The memory switch number will appear in the PROGRAM No. display, and its setting value will appear in the menu display.

4449Q 4421Q

**2**

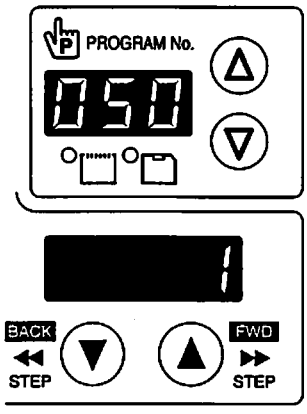


Press the Δ or ∇ key to select the memory switch number.

Press the ▲ or ▼ key to change the setting value.

4554Q

**If you would like to display only the numbers of memory switches that have been changed from default settings**

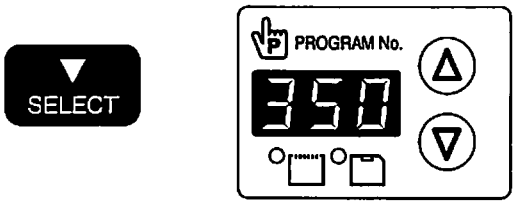


While pressing the SELECT key, press the Δ or ∇ key.
- The numbers of memory switches that have been changed from default settings will appear in order.
- If no memory switches have been changed from their default settings, the display will not change and the buzzer will beep twice.

4555Q

**3**

**Ending setting mode**


TEST indicator switches off

Press the TEST key.
- The changes will be memorized and the sewing machine will switch to home position detection standby.


- If you would like to return the setting for a single memory switch to the default setting, press the RESET key while the number for that memory switch is displayed.
- To return the settings for all memory switches to the default settings, keep pressing the RESET key for **two or more seconds** until the buzzer makes a long beep.

## 2-4. List of memory switches

| No. | Setting range | Setting items | Default |
|---|---|---|---|
| 001 | Work clamp/button clamp lift timing when sewing is complete | | OFF |
| | OFF | Lifts at the final stitch position. | |
| | ON | Lifts after moving to the home position. | |
| 003 | 2-step work clamp | | OFF |
| | OFF | Disable | |
| | ON | Stops at intermediate work clamp height setting mode when foot switch is depressed to 1st step, and then drops fully and sewing starts when foot switch is depressed to 2nd step. | |
| 100 | Slow start | | OFF |
| | OFF | The sewing speed for the first 1 - 5 stitches is set by memory switch nos. 151 - 155. | |
| | ON | KE-430D: Slow start with 1st stitch sewn at 400 rpm and 2nd stitch sewn at 800 rpm.<br>BE-438D: Slow start with 1st and 2nd stitches sewn at 400 rpm. | |
| 200 | Single-stitch test feed | | *1 |
| | OFF | Test feed starts when the foot switch is depressed, and it continues automatically until the final stitch. | |
| | ON | Test feeding is carried out stitch by stitch when the foot switch is depressed.<br>In addition, when the test indicator is illuminated, test feeding will move forward one stitch at a time when the machine pulley is turned by hand. | |
| 300 | Production counter display | | OFF |
| | OFF | Lower thread counter display | |
| | ON | Production counter display | |
| 400 | User programs | | OFF |
| | OFF | Disable | |
| | ON | User program mode is enabled. | |
| 401 | Cycle programs | | OFF |
| | OFF | Disable | |
| | ON | When sewing user programs, the set programs are sewn in numeric order. | |
| 402 | Units display for pattern zoom ratio (*2) | | OFF |
| | OFF | Displayed as %. | |
| | ON | Displayed as mm. | |
| 500 | Thread nipper device | | OFF |
| | OFF | Disable | |
| | ON | Thread nipper device can be used. (*3) | |

*1 Off for KE-430D and ON for BE-438D.
*2 The mm display may differ slightly from the actual sewing size.
*3 May not operate if the settings for the memory switches have been changed, or at some sewing speeds.
* If memory switch No. 151 and No. 152 are set to a combination that does not appear in the following table, the thread nipper device will not work.

| No. | Setting value [1] | Setting value [2] | Setting value [3] |
|---|---|---|---|
| 151 | 15 | 8 | 4 |
| 152 | 20 | 12 | 6 |

* If the sewing speed is set to a lower speed than the setting for memory switch No. 152, the thread nipper device will not work.

**Work clamp settings**

| No. | Setting range | Setting items | | Default |
|---|---|---|---|---|
| 050 | Work clamp motions | | | 1 |
| | 1 | Single pedal | Work clamp is raised automatically. | |
| | 2 | | Work clamp is raised by depressing the foot switch. | |
| | 3 | Two pedals | Work clamp is raised automatically, then it is lowered by depressing the work clamp switch. | |
| | 4 | | Work clamp is kept lifted while the work clamp pedal is depressing the work clamp switch. | |
| 051 | Work clamp operation and thread winder operation before home position detection | | | OFF |
| | OFF | Work clamp vertical movement and thread winder operation are not possible before home position detection. | | |
| | ON | Work clamp vertical movement and thread winder operation are possible before home position detection. | | |

**Sewing machine motor settings**

| No. | Setting range | Setting items | Default |
|---|---|---|---|
| 150 | Highest needle position stop | | OFF |
| | OFF | Disable | |
| | ON | The motor operates in reverse when the upper shaft stops, to return the needle bar to close to its highest position. (When the motor operates in reverse to raise the needle, the thread take-up will stop at a position which is lower than its normal stopping position. As a result, the thread take-up will rise slightly at the sewing start, and this may result in the thread pulling out under certain conditions.) | |
| 151 | Speed for the first stitch at the sewing start [Units x 100 rpm] | | *4 |
| | 4 - 32 | For KE-430D | |
| | 4 - 27 | For BE-438D | |
| 152 | Speed for the second stitch at the sewing start [Units x 100 rpm] | | |
| | 4 - 32 | For KE-430D | |
| | 4 - 27 | For BE-438D | |
| 153 | Speed for the third stitch at the sewing start [Units x 100 rpm] | | |
| | 4 - 32 | For KE-430D | |
| | 4 - 27 | For BE-438D | |
| 154 | Speed for the fourth stitch at the sewing start [Units x 100 rpm] | | |
| | 4 - 32 | For KE-430D | |
| | 4 - 27 | For BE-438D | |
| 155 | Speed for the fifth stitch at the sewing start [Units x 100 rpm] | | |
| | 4 - 32 | For KE-430D | 32 |
| | 4 - 27 | For BE-438D | 27 |
| 156 | Speed for the fifth stitch before the sewing end [Units x 100 rpm] | | |
| | 4 - 32 | For KE-430D | 32 |
| | 4 - 27 | For BE-438D | 27 |
| 157 | Speed for the fourth stitch before the sewing end [Units x 100 rpm] | | |
| | 4 - 32 | For KE-430D | 32 |
| | 4 - 27 | For BE-438D | 27 |
| 158 | Speed for the third stitch before the sewing end [Units x 100 rpm] | | |
| | 4 - 32 | For KE-430D | 32 |
| | 4 - 27 | For BE-438D | 27 |
| 159 | Speed for the second stitch before the sewing end [Units x 100 rpm] | | 27 |
| | 4 - 32 | For KE-430D | |
| | 4 - 27 | For BE-438D | |

*4 Default values for each model setting

| No. | KE-430D-01, -07 | KE-430D-02 | BE-438D |
|---|---|---|---|
| 151 | 8 | 15 | 4 |
| 152 | 12 | 20 | 6 |
| 153 | 32 | | 9 |
| 154 | 32 | | 20 |

| No. | Setting range | Setting items | Default |
|---|---|---|---|
| 161 | Needle penetration force increase | | OFF |
| | OFF | Disable | |
| | ON | Needle penetration force is increased when sewing machine motor is locked. | |
| 162 | Limitations on sewing speed changes due to changes in sewing pitch | | OFF |
| | OFF | Sewing speed fluctuates according to the sewing pitch in the sewing data. | |
| | ON | Sewing speed is fixed at slowest speed for the maximum sewing pitch in the sewing data.<br>(Set to ON if changes in sewing speed due to changes in sewing pitch might be a problem.) | |
| 163 | Limits maximum sewing speed [units x 100 rpm]. | | |
| | 12 - 32 | For KE-430D | 32 |
| | 12 - 27 | For BE-438D | 27 |
| 164 | No thread trimming | | OFF |
| | OFF | Thread trimming is carried out in accordance with sewing data. | |
| | ON | All thread trimming operations are disabled. | |
| 165 | Highest needle position stop angle [units 2-degree steps] (*5) | | 0 |
| | -15 - 0 | 0 : Normal needle up position<br>Needle bar height increases for values in the negative direction. | |

*5 If the value is set to too large a negative value, error "E110" may be generated at the first sewing start after the power is turned on.

**Feed settings**

| No. | Setting range | Setting items | Default |
|---|---|---|---|
| 250 | Mechanism home position return when sewing is complete | | OFF |
| | OFF | At the end of sewing, the feed plate will be returned to the sewing start point directly. | |
| | ON | At the end of sewing, the feed plate will be returned to the sewing start point via mechanical home position. | |
| 251 | Feed speed | | 1 |
| | 1 | 100 mm/s Slow | |
| | 2 | 200 mm/s | |
| | 3 | 300 mm/s | |
| | 4 | 400 mm/s | |
| | 5 | 500 mm/s Fast | |
| 252 | High speed test feed | | OFF |
| | OFF | Normally slow, but becomes faster when the foot switch is depressed to the 1st step | |
| | ON | Test feeding is carried out at the same speed as normal sewing. | |
| 253 | Home position detection method | | OFF |
| | OFF | Depress foot switch while the program number is flashing. | |
| | ON | Press the special external input switch [EXIN3] while the program number is flashing (foot switch is disabled). | |
| 260 | Changes the whole feed timing. | | 0 |
| | -10 - 10 | -10: Early ◘ 0: Standard ◘ 10: Late | |
| 261 | Changes the feed timing for the first stitch at the sewing start. | | |
| | -10 - 10 | KE-430D: -10: Early ◘ 0: Standard ◘ 10: Late | 0 |
| | | BE-438D: -10: Early ◘ 5: Standard ◘ 10: Late | 5 |
| 262 | Changes the feed timing for the second stitch at the sewing start. | | |
| | -10 - 10 | KE-430D: -10: Early ◘ 0: Standard ◘ 10: Late | 0 |
| | | BE-438D: -10: Early ◘ 5: Standard ◘ 10: Late | 5 |
| 263 | Changes the feed timing for the third stitch at the sewing start. | | |
| | -10 - 10 | KE-430D: -10: Early ◘ 0: Standard ◘ 10: Late | 0 |
| | | BE-438D: -10: Early ◘ 5: Standard ◘ 10: Late | 5 |
| 264 | Changes the feed timing for the third stitch before the sewing end. | | |
| | -10 - 10 | KE-430D: -10: Early ◘ 0: Standard ◘ 10: Late | 0 |
| | | BE-438D: -10: Early ◘ 5: Standard ◘ 10: Late | 5 |
| 265 | Changes the feed timing for the second stitch before the sewing end. | | |
| | -10 - 10 | KE-430D: -10: Early ◘ 0: Standard ◘ 10: Late | 0 |
| | | BE-438D: -10: Early ◘ 5: Standard ◘ 10: Late | 5 |
| 266 | Changes the feed timing for the first stitch before the sewing end. | | |
| | -10 - 10 | KE-430D: -10: Early ◘ 0: Standard ◘ 10: Late | 0 |
| | | BE-438D: -10: Early ◘ 5: Standard ◘ 10: Late | 5 |
| 267 | If the overall feed timing (No. 260 setting) is changed from the default value, this specifies the effective number of stitches. | | 0 |
| | 0 | No limit | |
| | 1 - 99 | Once the specified number of stitches from the sewing start has been reached, timing returns to standard feed timing. | |

**Operation panel settings**

| No. | Setting range | Setting items | Default |
|---|---|---|---|
| 350 | Operation panel changing limitations | | 0 |
| | 0 | No limitations on changing values set using the operation panel. | |
| | 1 | Changing of any values set using the operation panel is not allowed (except for memory switches). | |
| | 2 | Operations other than lower thread counter and production counter are not allowed. | |
| | 3 | Changing program numbers is not allowed. | |
| | 4 | Changing program numbers and X-Y scales is not allowed. | |
| | 5 | Changing program numbers, X-Y scales and sewing speeds is not allowed. | |
| | 6 | Enlarging X-Y scales is not allowed (reducing is allowed). | |
| | 7 | Changing sewing speeds is not allowed. | |
| 351 | Changing memory switches | | OFF |
| | OFF | Changes are allowed | |
| | ON | Changes are prevented | |

**User program settings**

| No. | Setting range | Setting items | Default |
|---|---|---|---|
| 450 | Moving start point when switching user programs | | OFF |
| | OFF | Feed will move to the next sewing start point after a user program is switched after starting. | |
| | ON | Feed will move to the next sewing start point at the same time as a user program is switched. | |
| 451 | Split mode selection | | 0 |
| | 0 | Continuous split mode (Split menu is disabled before split detection) | |
| | 1 | Continuous split mode (split menu is always enabled) | |
| | 2 | Independent split mode | |
| 452 | Setting change limitations for user programs | | OFF |
| | OFF | No limitations | |
| | ON | Changing user program details is not allowed. | |

**Data editing settings**

| No. | Setting range | Setting items | Default |
|---|---|---|---|
| 460 | X direction sewing area limitation [units mm] | | |
| | 0 - 40 | For KE-430D | 40 |
| | 0 - 7 | For BE-438D | 7 |
| 461 | Y direction sewing area limitation [units mm] | | |
| | 0 - 30 | For KE-430D | 30 |
| | 0 - 7 | For BE-438D | 7 |
| 462 | Enlargement/reduction reference point | | OFF |
| | OFF | Center point of sewing frame | |
| | ON | Sewing start point | |
| 463 | Enlargement/reduction of bar tacking | | OFF |
| | OFF | Bar tacking stitch lengths (when pitch is approx. 1 mm or less) are not enlarged or reduced. | |
| | ON | Bar tacking stitch lengths (when pitch is approx. 1 mm or less) are also enlarged or reduced. | |
| 464 | XY linking of enlargement/reduction ratios | | OFF |
| | OFF | Disable | |
| | ON | Enlargement and reduction ratio settings for X and Y become the same. (Disabled for user programs) | |
| 465 | Recording parallel movement amounts for sewing patterns | | OFF |
| | OFF | Reset when program numbers and enlargement reduction ratios are changed and when power is turned off. | |
| | ON | Reset when program numbers and enlargement reduction ratios are changed, but not reset when power is turned off. | |
| 466 | Copying to internal memory not allowed when separate sewing data is being read from CF card | | OFF |
| | OFF | Data is copied to internal memory at the same time it is read. | |
| | ON | Data is not copied to internal memory at the same time it is read. | |

**Device settings**

| No. | Setting range | Setting items | Default |
|---|---|---|---|
| 550 | Needle cooler | | OFF |
| | OFF | Disable | |
| | ON | Needle cooler can be used. | |
| 551 | Tension release settings at sewing start | | OFF |
| | OFF | Disable | |
| | ON | Enable | |
| 552 | Tension release timing when thread is trimmed (Units 8-degree steps) | | 0 |
| | -4 - 1 | -4: Early ◘ 0: Standard ◘ 1: Late | |
| 553 | Thread nipper timing | | 2 |
| | 1 - 4 | 1: Early ◘ 2: Standard ◘ 4: Late | |

**Error processing settings**

| No. | Setting range | Setting items | Default |
|---|---|---|---|
| 655 | Disabling of needle up stop position monitoring sensor | | OFF |
| | OFF | Sensor is enabled and detects needle up stop position errors [E110]. | |
| | ON | Disable | |

**Maintenance settings**

| No. | Setting range | Setting items | Default |
|---|---|---|---|
| 750 | Breaking-in operation mode | | 0 |
| | 0 | Disable | |
| | 1 | Operates continuously while the foot switch is being depressed after the work clamp moves up and down once (no vertical work clamp movement when the setting value for memory switch No. 050 is "2"). | |
| | 2 | Operates continuously while the foot switch is being depressed after the work clamp moves up and down twice (no vertical work clamp movement when the setting value for memory switch No. 050 is "2"). | |
| | 3 | Operates continuously while the foot switch is being depressed after the work clamp moves up and down three times (no vertical work clamp movement when the setting value for memory switch No. 050 is "2"). | |
| 751 | Breaking-in operation cycle time adjustment timer | | 20 |
| | 0 - 255 | Units [x10 ms] | |
| 752 | 00 - 99 | Sewing machine ID code (for specifying CF card sewing data) | 00 |

**Specification and destination settings**

| No. | Setting range | Setting items | Default |
|---|---|---|---|
| 850 | Specification code setting (Can only be set for KE-430D) | | 0 |
| | 0 | Factory default specifications (specifications displayed on name plate on machine head) | |
| | 1 | For ordinary materials | |
| | 2 | For denim | |
| | 7 | For foundation garments | |

## 2-5. Setting the work clamp mode

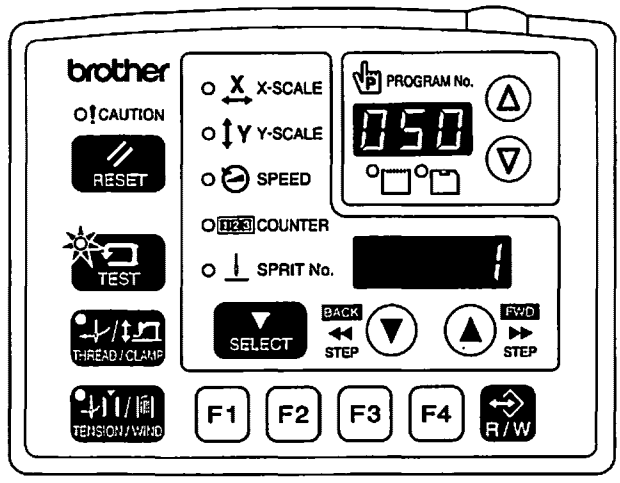


4556Q

The work clamp/button clamp operating mode can be switched as follows using the setting for memory switch No. 050.

| Setting range | Setting items | |
|---|---|---|
| 1 | Single pedal | Work clamp is raised automatically. |
| 2 | | Work clamp is raised by depressing the foot switch. |
| 3 | Two pedals | Work clamp is raised automatically, then it is lowered by depressing the work clamp switch. |
| 4 | | Work clamp is kept lifted while the work clamp pedal is depressing the work clamp switch. |

## 2-6. X-Y parallel movement for sewing patterns

The feed mechanism can be moved to the desired position and sewing patterns that have already been programmed can be moved in parallel vertical or horizontal directions.

**1**

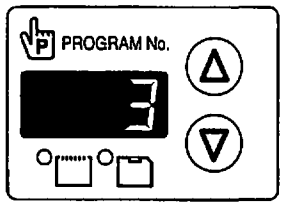


Press the Δ or ∇ key to select the program number, and then depress the foot switch to the 2nd step.
• The feed mechanism will move to the home position.

2nd step

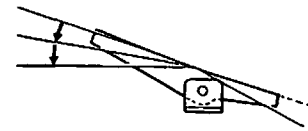

4557Q 4441Q

**2**

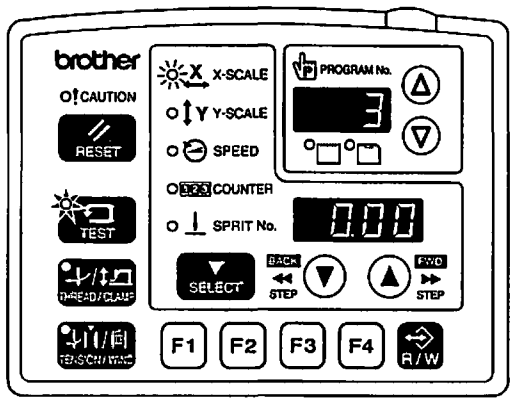


TEST indicator lights
X-SCALE indicator flashes

While pressing the TEST key, press the ∇ key.


• The parallel movement amount is displayed in the menu display in mm units.

4558Q 4559Q

**3**

**X scale parallel movement mode** | **Y scale parallel movement mode**

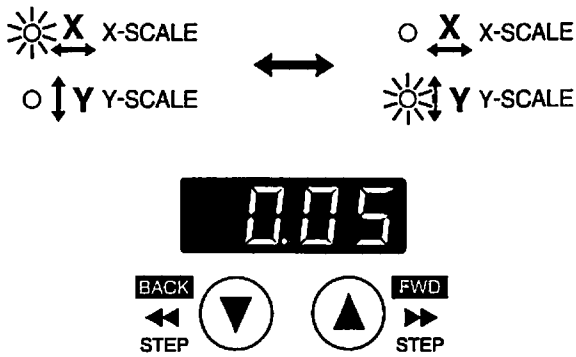


Press the SELECT key so that the X-SCALE or Y-SCALE indicator flashes. Select either indicator.


The feed mechanism moves by 0.05 mm each time the ▲ or ▼ key is pressed. (If the movement is over 10 mm, the steps change to 0.1 mm.)

* For X scale parallel movement mode, the relative movement of the needle is to the right when the ▲ key is pressed, and the movement is to the left when the ▼ key is pressed.
* For Y scale parallel movement mode, the relative movement of the needle is to the back when the ▲ key is pressed, and the movement is to the front when the ▼ key is pressed.

4566Q 4561Q

**4**

**Ending parallel movement mode**


TEST indicator switches off

Press the TEST key.

**Note:**

- The feed mechanism cannot move to a place that would exceed the sewing area for the sewing pattern.
- If the program number or the vertical or horizontal ratio is changed, the movement amount that has been recorded will be reset.
- Also once the power switch has been turned off, the amount of movement that has been stored in memory is reset. (However, when memory switch No. 465 is set to ON, the movement amount is recorded and is not reset.)

## 2-7. Clearing saved data (Initialization)

Incorrect setting of data from sources such as memory switches can cause the sewing machine to operate incorrectly. If this happens, you can follow the procedure below to initialize the saved data to return the sewing machine to normal operation.

| Parameter No. | Setting items | |
|---|---|---|
| 1 | [ SEW] | Clearing all additional sewing programs (from program no. 200 onward). |
| | [ - • • • ] | Clearing individual programs from program No. 200 and after |
| 2 | [ MEM] | Initializing memory switches. |
| 3 | [ ALL] | Clearing or initializing all setting data (added sewing programs, memory switch settings, user programs and cycle programs) |
| 4 | [ USE] | Clearing user programs and cycle programs. |

**1**

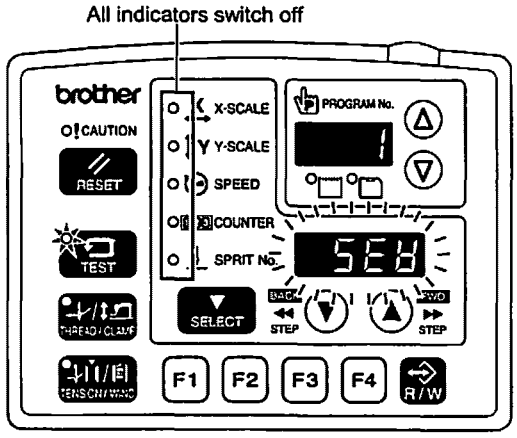


TEST indicator lights
Menu indicators switch off

While pressing the RESET key, turn on the power switch.
* Keep pressing the RESET key until the model name is displayed and the buzzer beeps once.

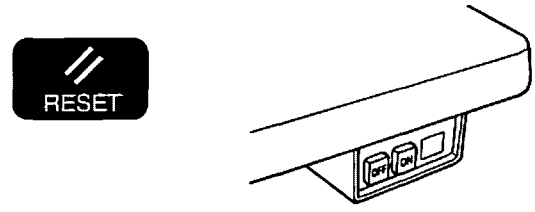


• The parameter number will appear in the PROGRAM No. display, and the setting for that parameter will flash in the menu display.

4562Q 4421Q

**2**

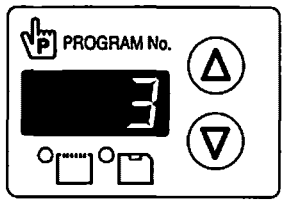


Press the Δ or ∇ key to select the parameter number for the item that is to be initialized.

4557Q

**Selecting individual added sewing programs**

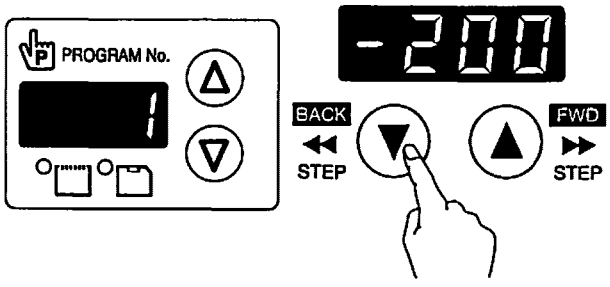


If you press the ▼ key when parameter number "1" is selected, the display will change from " SEW" to "-***". (*** is the added sewing program number.)

Press the ▲ or ▼ key to select the parameter number which is to be cleared of data.

4563Q

**3**


Press and hold the RESET key for 2 seconds or more.
* A long beep will sound and the data for the selected item will be initialized.
* The setting for only the item reinitialized will stop flashing and illuminate steadily.

**4** **Ending data initialization mode**


TEST indicator switches off

Press the TEST key.

## 2-8. Checking the error history

The past error history can be checked by the following procedure.

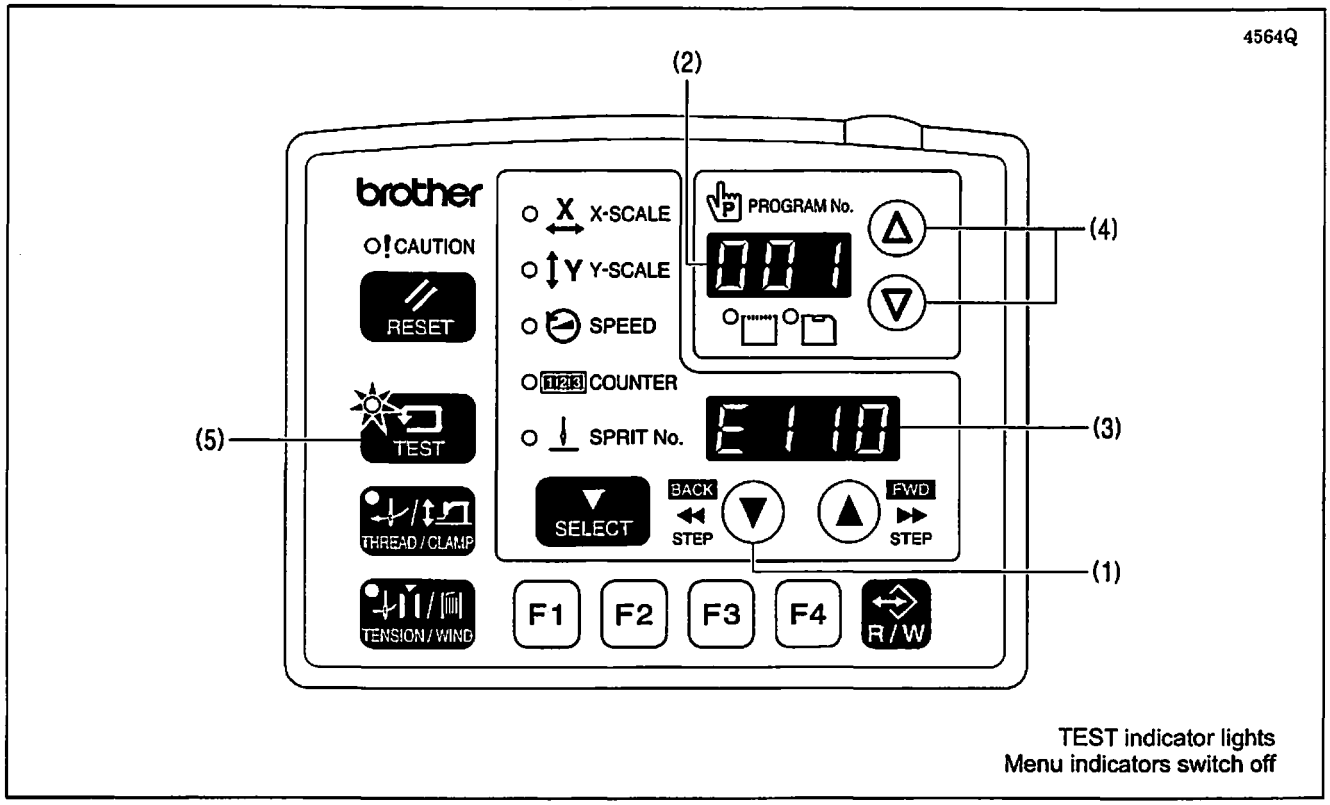


1. While pressing the ▼ key (1), turn on the power switch.
   * Keep pressing the ▼ key (1) until the model name is displayed and the buzzer beeps once.
   The error history number will be displayed in order in the PROGRAM No. display (2) and the error codes will be displayed in the menu display (3).
2. Press the Δ or ∇ key (4) to change the order of the error history number.
3. Press the TEST key (5) to return to the normal display. The sewing machine will switch to home position detection standby.

<Display examples>

| Details | PROGRAM No. display (2) | Menu display (3) |
|---|---|---|
| When there is no error history | [000] | [E - - -] |
| When error [E110] is displayed first | [001] | [E110] |

• The COUNTER indicator will light while the ▲ key (6) is pressed, and the stitch number counter value when the error occurred will be displayed in the PROGRAM No. display (2) and menu display (3) in units of 100 stitches.

## 2-9. Input checking method

Use this method to check for any malfunctions of the input keys at the operation panel, P.C.B.s and sensors, and for any broken cords or sensor position adjustments.

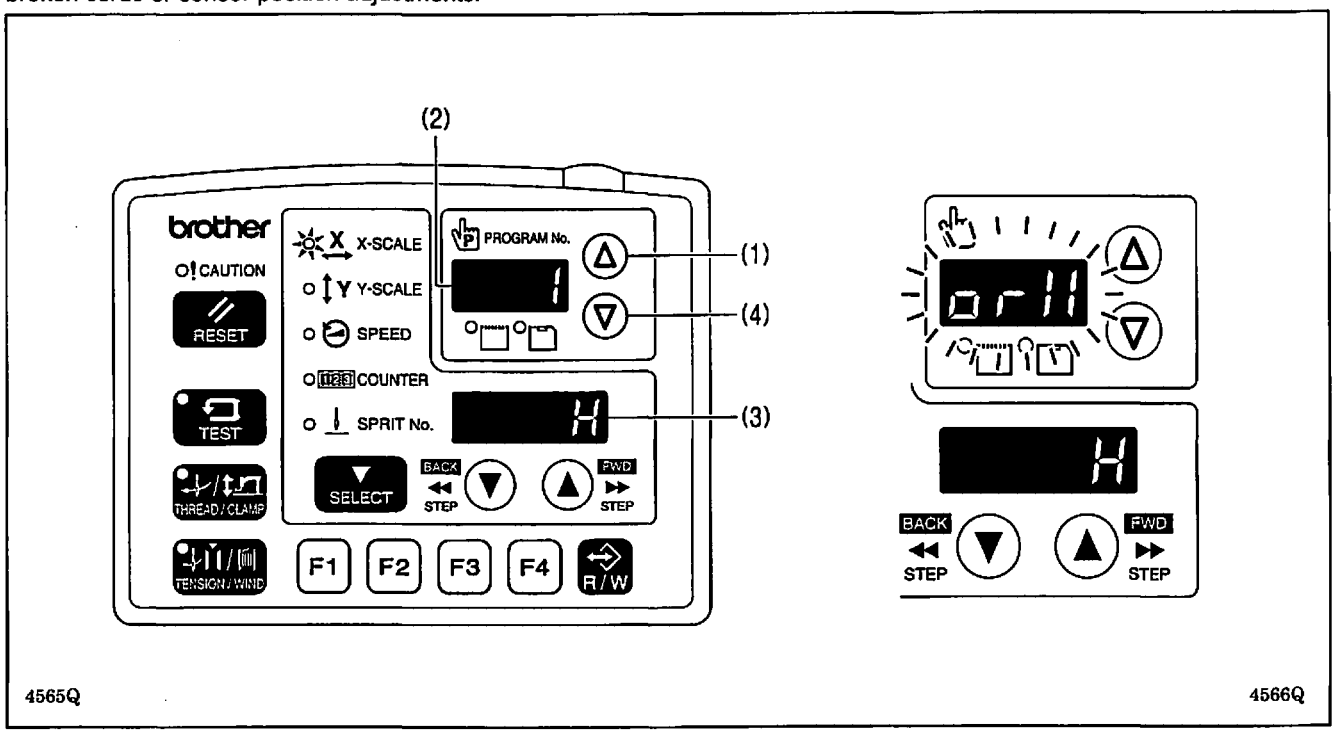


1. While pressing the Δ key (1), turn on the power switch.
   * Keep pressing the Δ key (1) until the model name is displayed and the buzzer beeps once.
   * The check code will be displayed in the PROGRAM No. display (2), and the input status will be displayed in the menu display (3).
2. Press the Δ key (1) or ∇ key (4) to select a desired check code.
   If no operations are carried out for 5 seconds after moving to a check code, the check code and abbreviation will be displayed alternately in the PROGRAM No. display (2).
3. Refer to the input check list to check the key and sensor responses.
4. When returning to normal operation, turn power off and then on again.

**< Input check list >**

| PROGRAM No. display | | Menu display | Check items and checking methods |
|---|---|---|---|
| Check code | Abbreviation | Input status | |
| [ 1 ] | [ orX ] | [ H ] / [ L ] | X-feed shaft motor home position sensor position<br>Move the feed mechanism manually in the X-feed direction. |
| [ 2 ] | [ EnX ] | [ -999 ] - [ 999 ] | X-feed shaft motor encoder counter value<br>Move the feed mechanism manually in the X-feed direction. |
| [ 3 ] | [ orY ] | [ H ] / [ L ] | Y-feed shaft motor home position sensor position<br>Move the feed mechanism manually in the Y-feed direction. |
| [ 4 ] | [ EnY ] | [ -999 ] - [ 999 ] | Y-feed shaft motor encoder counter value<br>Move the feed mechanism manually in the Y-feed direction. |
| [ 5 ] | [ orP ] | [ H ] / [ L ] | Work clamp motor home position sensor position<br>Move the work clamp up manually. |
| [ 6 ] | [ EnP ] | [ -999 ] - [ 999 ] | Work clamp motor encoder counter value<br>Move the work clamp up manually. |
| [ 7 ] | [ Enn ] | [ 0 ] - [ 180 ] | Upper shaft 180 degree rotation signal<br>Turn the pulley by hand. |

| PROGRAM No. display | | Menu display | Check items and checking methods |
|---|---|---|---|
| Check code | Abbreviation | Input status | |
| [ 8 ] | [ UP ] | [ on ] / [ oFF ] | Needle up signal<br>Turn the pulley by hand. |
| [ 9 ] | [ dn ] | [ on ] / [ oFF ] | Needle down signal<br>Turn the pulley by hand. |
| [ 10 ] | [ voL ] | [ 0 ] - [ 300 ] | Power supply voltage<br>Displayed as %. |
| [ 11 ] | [ PnL ] | [ * ] / [ oFF ] | Operation panel key input check<br>The key name will be displayed while a key is pressed. |
| | | * ON display | Key name |
| | | [ rESt ] | RESET key |
| | | [ tESt ] | TEST key |
| | | [ tHrE ] | THREAD/CLAMP key |
| | | [ tEn ] | TENSION/WIND key |
| | | [ SELE ] | SELECT key |
| | | [ UP-M ] | ▲ key |
| | | [ dn-M ] | ▼ key |
| | | [ F1 ] | Function key F1 |
| | | [ F2 ] | Function key F2 |
| | | [ F3 ] | Function key F3 |
| | | [ F4 ] | Function key F4 |
| | | [ CF ] | R/W key |
| [ 12 ] | [ FtA ] | [ 0 ] - [ 255 ] | Foot switch analog value<br>Depress the foot switch. |
| [ 13 ] | [ CL1 ] | [ on ] / [ oFF ] | Work clamp switch 1st step<br>Depress the foot switch to the 1st step. |
| [ 14 ] | [ CL2 ] | [ on ] / [ oFF ] | Work clamp switch 2nd step (*)<br>Depress the work clamp switch to the 2nd step. |
| [ 15 ] | [ Stt ] | [ on ] / [ oFF ] | Start switch<br>Depress the foot switch to the 2nd step. |
| [ 16 ] | [ EMC ] | [ - - on ]<br>[ on - - ]<br>[ - - - - ] | Stop switch (*)<br>Press the stop switch. |
| [ 17 ] | [ Hed ] | [ on ] / [ oFF ] | Machine head switch<br>Tilt back the machine head. |
| [ 18 ] | [ EXE ] | [ on ] / [ oFF ] | External input error detection (*) |
| [ 19 ] | [ CAH ] | [ on ] / [ oFF ] | Thread nipper home position sensor<br>Press the ▲ key to move the thread nipper in the home position direction.<br>Press the ▼ key to move the thread nipper in the retract direction. |
| [ 20 ] | [ rEL ] | [ on ] / [ oFF ] | Thread nipper retract position sensor<br>Press the ▲ key to move the thread nipper in the home position direction.<br>Press the ▼ key to move the thread nipper in the retract direction. |
| [ 21 ] | [ in1 ] | [ on ] / [ oFF ] | Option input (IN1) |
| [ 22 ] | [ in2 ] | [ on ] / [ oFF ] | Option input (IN2) |
| [ 23 ] | [ in3 ] | [ on ] / [ oFF ] | Option input (IN3) |
| [ 24 ] | [ in4 ] | [ on ] / [ oFF ] | Option input (IN4) |
| [ 25 ] | [ in5 ] | [ on ] / [ oFF ] | Option input (IN5) |
| [ 26 ] | [ rot ] | [ on ] / [ oFF ] | Rotating-type thread breakage detector (*) |
| [ 27 ] | [ Fib ] | [ on ] / [ oFF ] | Fiber-type thread breakage detector (*) |

* Spare for the KE-430D and BE-438D.

## 2-10. Output checking method

Use the following procedure when checking for PCB-related failures, mechanism breakdown, and cord breakage.
It can be checked as to whether signals that the CPU correctly output have been received.

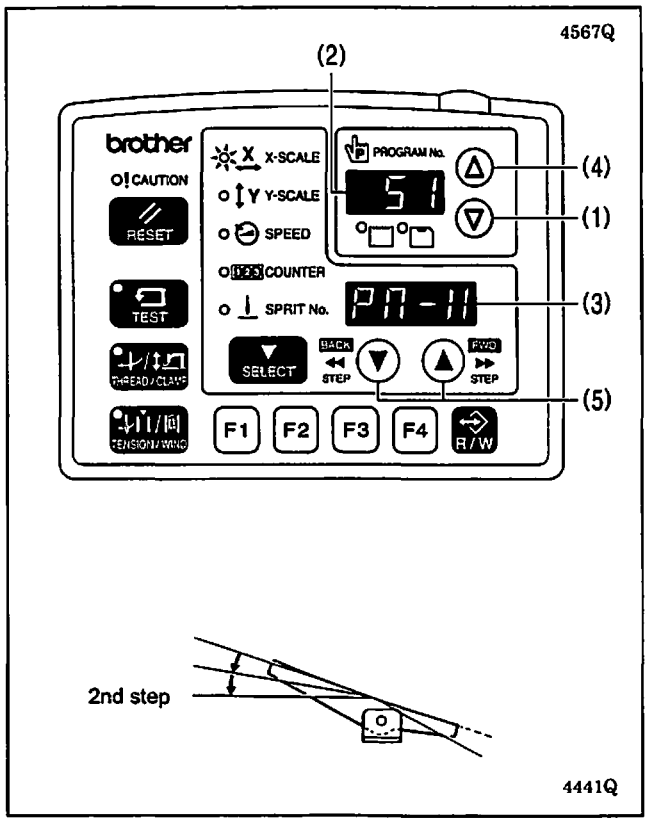


1. While pressing the ∇ key (1), turn on the power switch.
   * Keep pressing the ∇ key (1) until the model name is displayed and the buzzer beeps once.
   The check code will be displayed in the PROGRAM No. display (2), and the abbreviated output name will be displayed in the menu display (3).
2. Press the Δ key (4) or ∇ key (1) to select a desired check code.
3. Press the ▲ or ▼ key (5) to check the operations for check codes 51 - 54.
4. For check code 55 and after, depress the foot switch to the 2nd step.

> The operation corresponding to the check code will be carried out while the foot switch is being depressed forward (each time the foot switch is depressed forward for check code 60).

5. When returning to normal operation, turn power off and then on again.

| PROGRAM No. display<br>Check code | Menu display<br>Abbreviation | Function |
|---|---|---|
| [ 51 ] | [ PM - X ] | When you press the ▲ key, the work clamps move to the left.<br>When you press the ▼ key, the work clamps move to the right. |
| [ 52 ] | [ PM - y ] | When you press the ▲ key, the work clamps move forward.<br>When you press the ▼ key, the work clamps move back. |
| [ 53 ] | [ PM - F ] | When you press the ▲ key, the work clamps rise.<br>When you press the ▼ key, the work clamps drop. |
| [ 54 ] | [ CatH ] | When you press the ▲ key, the thread nipper moves toward the home position.<br>When you press the ▼ key, the thread nipper moves toward the retract position. |
| [ 55 ] | [ CL - r ] | The valve for the right work clamp turns on. (*) |
| [ 56 ] | [ CL - L ] | The valve for the left work clamp turns on. (*) |
| [ 57 ] | [ Foot ] | The valve for the stepping foot turns on. (*) |
| [ 58 ] | [ FliP ] | The valve for the inner clamping device turns on. (*) |
| [ 59 ] | [ CooL ] | The valve for the needle cooler turns on. (*) |
| [ 60 ] | | The LEDs on the panel illuminate in sequence, and then each of the seven segments of the PROGRAM No. display and menu display illuminate. |
| [ 61 ] | [ CUt ] | The thread trimmer solenoid turns on. |
| [ 62 ] | [ rEL ] | The tension release solenoid turns on. |
| [ 63 ] | [ WiP ] | The external wiper solenoid turns on. |
| [ 64 ] | [ StEP ] | The stepping solenoid turns on. (*) |
| [ 65 ] | [ oP1 ] | Option output 1 turns on. |
| [ 66 ] | [ oP2 ] | Option output 2 turns on. |
| [ 67 ] | [ oP3 ] | Option output 3 turns on. |

* Spare for the KE-430D and BE-438D.

## 2-11. Confirming software version

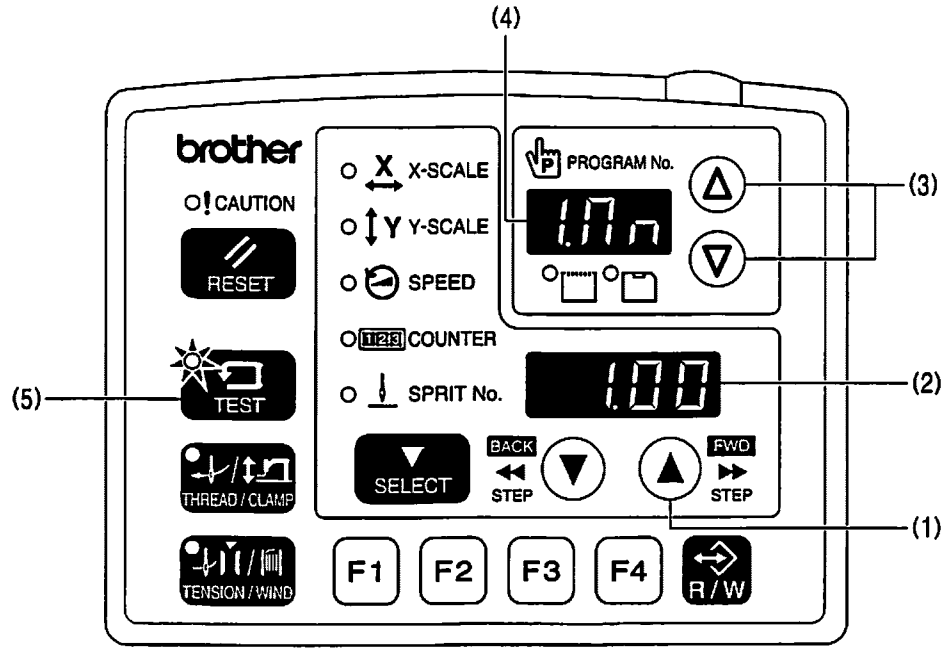


1. If you turn on the power while pressing the ▲ key (1), the software version will be displayed in the menu display (2).
   * Keep pressing the ▲ key (1) until the model name is displayed and the buzzer beeps once.
2. The PROGRAM No. display (4) will change as follows each time the Δ or ∇ key (3) is pressed.

| PROGRAM No. display (4) | Software |
|---|---|
| [ 1.Mn ] | Main CPU |
| [ 2.Mt ] | Motor CPU |
| [ 3.PL ] | Panel CPU |

3. Press the TEST key (5) to return to the normal display. The sewing machine will switch to home position detection standby.

# 3. USING CF CARDS

## 3-1. Notes on handling CF cards (purchase at local retailers)

- Use only 32MB, 64MB, 128MB or 256MB CF cards.
- Do not disassemble or alter CF cards.
- Do not bend, drop, scratch or place heavy objects on top of the CF cards.
- Do not allow the CF cards to become wet, such as with water, oil, solvents, drinks or any other liquids.
- Do not use or store the CF cards in a locations exposed to strong static electricity or electrical interference.
- Do not use or store the CF cards in a locations exposed to vibrations or impacts, direct sunlight, extreme dust (or lint), high temperatures, high humidity, severe temperature fluctuations, or strong magnetic forces (such as from speakers).
- While data is being read in from or written to the CF cards, do not allow the machine to be exposed to vibrations or impacts, and do not attempt to remove the CF cards from the machine.
- Data on the CF cards may be lost or damaged due to some malfunction or accident. We recommend backing up important data.
- Only insert or remove CF cards while the machine power is turned off.
- The CF cards that you purchased is already formatted. We recommend that the CF cards not be reformatted.
- The recommended CF cards are commercially-available ones from SanDisk or HAGIWARA SYS-COM. CF cards from other manufacturers can be used, but different formatting methods may mean that reading or writing to such cards may not be possible.

For additional information, refer to the instruction manual included with the CF cards that you have purchased.

* This product is compatible with CF cards that have been formatted using the FAT16 method. Cards that have been formatted using the FAT32 method cannot be used.
* CF™ is a trademark of SanDisk Corporation.
* All other company and product names mentioned in this instruction manual are trademarks or registered trademarks of their respective companies. However, the explanations for markings such as TM are not clearly described within the text.

## 3-2. Structure of a CF card folder

| | |
|---|---|
| \BROTHER\SM\SMSYS\SM01MN.MOT | : Control program |
| \BROTHER\SM\SMDA00\SMMSW.SEW | : Memory switch data |
| (*1) \SMUPG.SEW | : User program data |
| \SMHST.SEW | : Error log data |
| \SMS0200.SEW | : Additional sewing data Program No. 200 |
| \SMS0201.SEW | : Additional sewing data Program No. 201 |
| \SMS0202.SEW | : Additional sewing data Program No. 202 |
| ⋮ | ⋮ |

*1 The underlined portion of the name of the \BROTHER\SM\SMDA00 folder for additional sewing data can be changed by changing the setting for memory switch No. 752. Change the folder name if you would like to store additional sewing data for different sewing machines on a single CF card.

4726Q

## 3-3. Preparation for reading and writing data

**1**

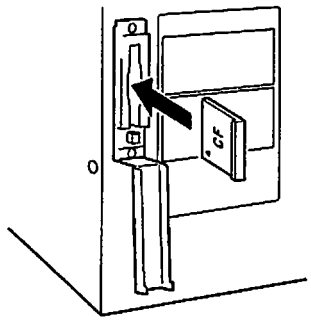


With the power turned off, insert the CF card into the CF slot.

**Note:**
- Make sure the CF card is facing the correct way.
- The cover should be closed at all times except when the CF card is inserted and removed, otherwise dust may cause trouble.
- If no valid data can be found, the CF media indicator will not illuminate.

4453Q

**2** **Turn on the power switch.**

**3** **Switching to CF data read/write mode**

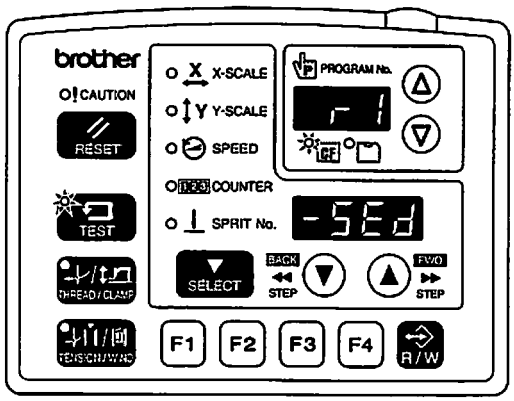


TEST indicator and CF media indicator light

While pressing the TEST key, press the R/W key.



- The mode number will be displayed in the PROGRAM No. display and the setting will be displayed in the menu display.
- The initial mode will be additional sewing data reading mode. (Refer to the read/write mode list.)

4574Q

**4**

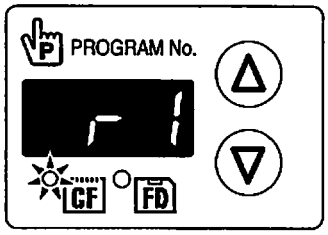


Press the Δ or ∇ key to select the mode.

4575Q

**[Read/write mode list]**

| PROGRAM No. display | Menu display | Setting items |
|---|---|---|
| r 1 | [ -SEd ] | Additional sewing data is read from the CF card. * |
| w 2 | [ SEd- ] | Additional sewing data is written to the CF card. |
| r 3 | [ -MEM ] | Memory switch settings are read from the CF card. |
| w 4 | [ MEM- ] | Memory switch settings are written to the CF card. |
| r 5 | [ -UPG ] | User programs are read from the CF card. |
| w 6 | [ UPG- ] | User programs are written to the CF card. |
| r 7 | [ -SyS ] | Control programs are read from the CF card and used to update the firmware version. |
| w 8 | [ LoG- ] | Error log data is written to the CF card. |

* Additional sewing data that can be used by this product is data that has been created for the KE-430D/BE-438D.

## 3-4. Reading additional sewing data

| | | |
|---|---|---|
| 1 | **Selecting the "r 1" CF data read/write mode** | Press the R/W key. |
| | 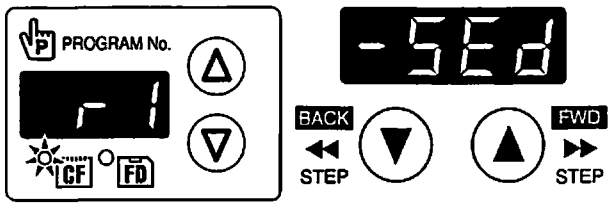  |   • "-SEd" will change to " ALL". 4576Q |
| 2 | 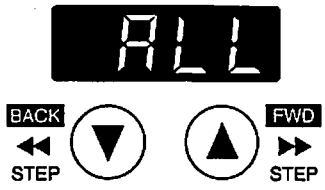  | Press the ▲ or ▼ key to select the program numbers (ALL, 200 - 999) that you would like to read.<br>• If " ALL" is displayed, all additional sewing data will be read. 4577Q |
| 3 | 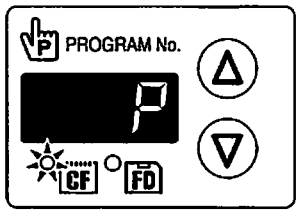  While reading | Press the R/W key.   • The buzzer will sound and the selected sewing data will be loaded from the CF card and copied into the sewing machine's internal memory. 4498Q |
| 4 | **Ending read/write mode**   TEST indicator switches off | Press the TEST key.<br>Turn off the power switch, and then remove the CF card. |

## 3-5. Writing additional sewing data to the CF card

| | | |
|---|---|---|
| 1 | **Selecting the "w 2" CF data read/write mode** | Press the R/W key. |
| | 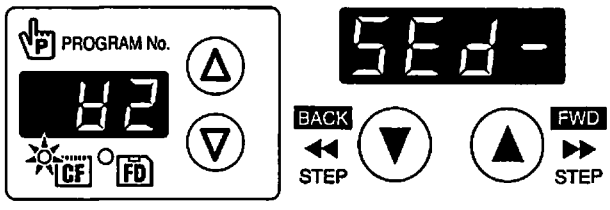  |   • "SEd-" will change to " ALL". 4578Q |
| 2 | 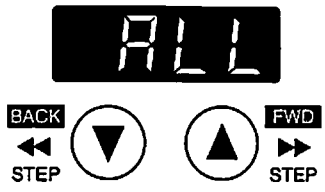  | Press the ▲ or ▼ key to select the program numbers (ALL, 200--999) that you would like to write.<br>• If " ALL" is displayed, all additional sewing data will be written. 4577Q |
| 3 | 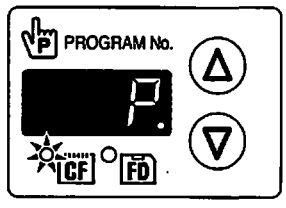  While writing | Press the R/W key.   • The buzzer will sound and the selected sewing data will be copied from the internal memory onto the CF card. 4579Q |
| 4 | **Ending read/write mode**   TEST indicator switches off | Press the TEST key.<br>Turn off the power switch, and then remove the CF card. |

## 3-6. Reading memory switch data

| | |
|---|---|
| 1 | **Selecting the "r 3" CF data read/write mode**<br> 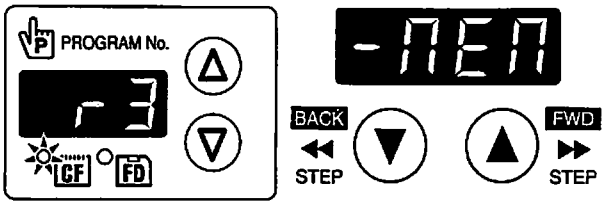 <br><br>4580Q |
| 2 | 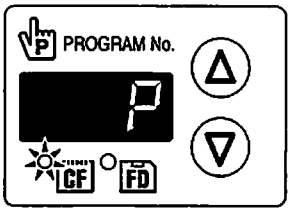 <br><br>While reading<br>Press the R/W key.<br>  <br><br>• The buzzer will sound and the selected memory switch data will be loaded from the CF card and copied into the sewing machine's internal memory.<br>4498Q |
| 3 | 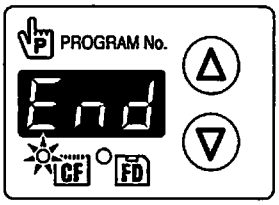 <br><br>When " End" is displayed, the operation is complete.<br>Turn off the power switch, and then remove the CF card.<br>4581Q |

## 3-7. Writing memory switch data to the CF card

| | |
|---|---|
| 1 | **Selecting the "w 4" CF data read/write mode**<br> 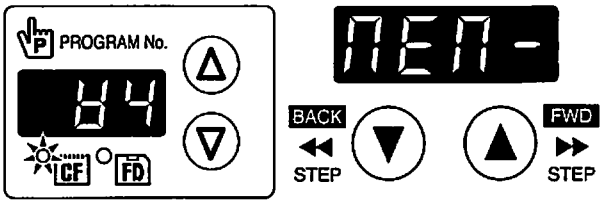 <br><br>4582Q |
| 2 | 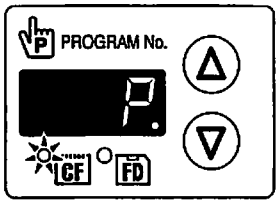 <br><br>While writing<br>Press the R/W key.<br>  <br><br>• The buzzer will sound and the memory switch data will be copied from the internal memory onto the CF card.<br>4579Q |
| 3 | **Ending read/write mode**<br>  <br><br>TEST indicator switches off<br>Press the TEST key.<br>Turn off the power switch, and then remove the CF card. |

## 3-8. Reading user program data

| | |
|---|---|
| 1 | **Selecting the "r 5" CF data read/write mode**<br>PROGRAM No. r5 CF FD ▲ ▼ -UPG BACK ◀◀ STEP ▼ ▲ FWD ▶▶ STEP<br>4583Q |
| 2 | PROGRAM No. P CF FD ▲ ▼<br>While reading<br>Press the R/W key.<br>R/W<br>• The buzzer will sound and the selected user program data will be loaded from the CF card and copied into the sewing machine's internal memory.<br>4498Q |
| 3 | PROGRAM No. End CF FD ▲ ▼<br>When " End" is displayed, the operation is complete.<br>Turn off the power switch, and then remove the CF card.<br>**Note:**<br>If additional sewing data has been incorporated into a user program, this operation will not read the additional sewing data. You will need to read the additional sewing data separately. (Refer to "3-4. Reading additional sewing data".)<br>4581Q |

## 3-9. Writing user program data to the CF card

| | |
|---|---|
| 1 | **Selecting the "w 6" CF data read/write mode**<br>PROGRAM No. w6 CF FD ▲ ▼ UPG- BACK ◀◀ STEP ▼ ▲ FWD ▶▶ STEP<br>4584Q |
| 2 | PROGRAM No. P. CF FD ▲ ▼<br>While writing<br>Press the R/W key.<br>R/W<br>• The buzzer will sound and the user program data will be copied from the internal memory onto the CF card.<br>4579Q |
| 3 | **Ending read/write mode**<br>TEST<br>TEST indicator switches off<br>Press the TEST key.<br>Turn off the power switch, and then remove the CF card. |

## 3-10. Updating the control programs

| | | |
|---|---|---|
| 1 | **Selecting the "r 7" CF data read/write mode** | Press the R/W key. |
| | 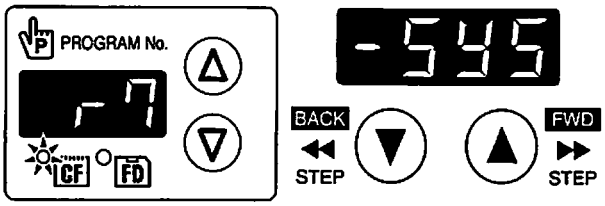  |   • After a set period of time, "-SyS" will change to " vEr", and then the version number of the control program that is stored on the CF card will be displayed. 4585Q |
| 2 | 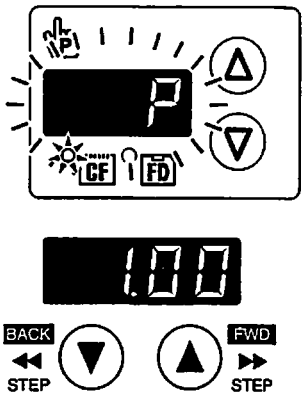  | Press the R/W key.   * " P" will flash in the PROGRAM No. display and the control program update will start. **Note:** If the filename and folder name for the control program are not correct, error "E421" will be displayed. 4586Q |
| 3 | 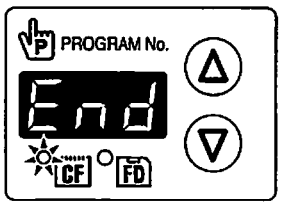  | When " End" is displayed, the operation is complete. Turn off the power switch, and then remove the CF card. **Note:** • The version upgrading takes about 3 minutes. (The time taken varies depending on the CF card manufacturer and the card's capacity.) • Never remove and reinsert the card or turn off the power switch while reading is in progress. 4581Q |

**<Recovery procedure if an error occurs during version updating>**
If the version update does not complete normally because of a problem such as a power failure, the sewing machine will not operate correctly.
If this happens, carry out the following recovery procedure.
1. Insert the CF card containing the control program data into the CF card slot.
2. Turn on the power switch.
3. When " End" is displayed, the operation is complete. Turn off the power switch, and then remove the CF card.

## 3-11. Writing error log data to the CF card

| | | |
|---|---|---|
| 1 | **Selecting the "w 8" CF data read/write mode**<br> 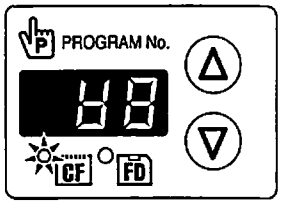 <br><br>4587Q | |
| 2 | 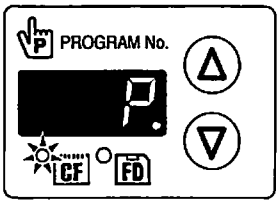 <br><br>While writing | Press the R/W key.<br>  <br><br>• The buzzer will sound and the error log data will be copied from the internal memory onto the CF card.<br>4579Q |
| 3 | **Ending read/write mode**<br>  <br><br>TEST indicator switches off | Press the TEST key.<br>Turn off the power switch, and then remove the CF card. |

# 4. MECHANICAL DESCRIPTIONS

The mechanisms operate in the order of the numbers given in the illustrations.

## 4-1. Needle bar and thread take-up mechanisms

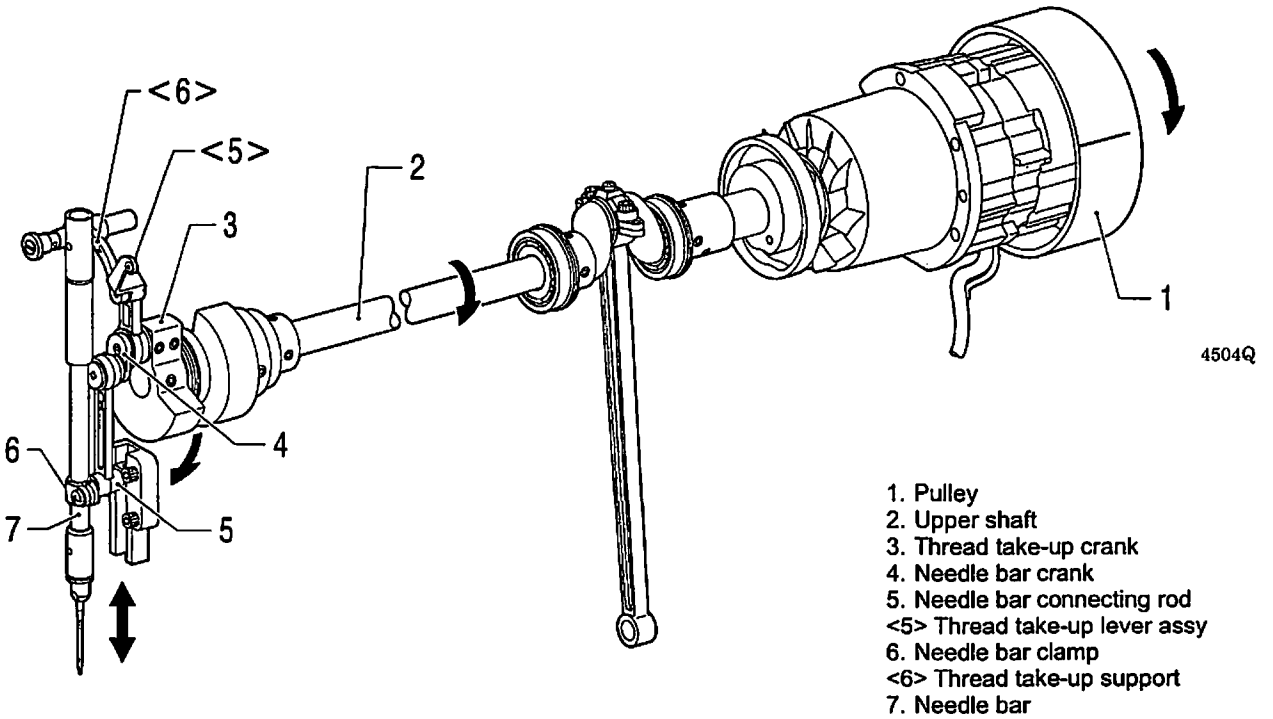


## 4-2. Lower shaft and shuttle race mechanisms

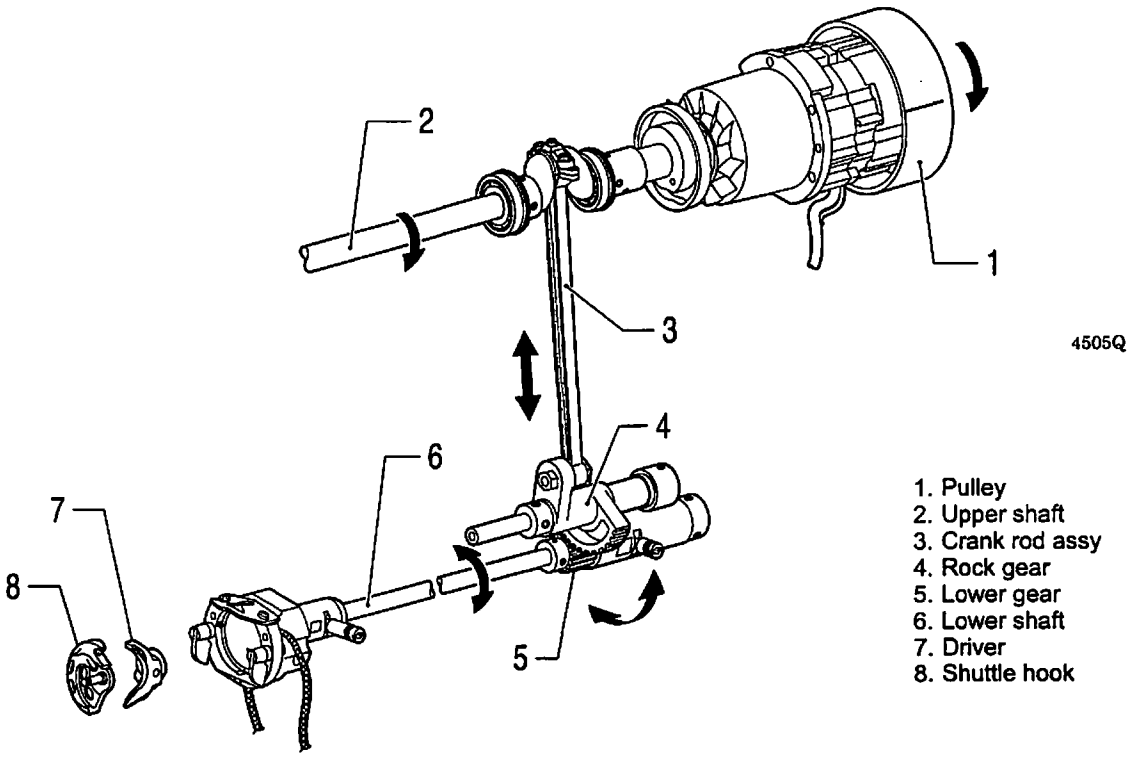

## 4-3. Work clamp lifter mechanism

1. Work clamp pulse motor
2. Gear
3. Cam gear
4. Driving lever
5. Link
6. Lifter lever
7. Work clamp lifter plate
8. Work clamp arm lever plate
9. Work clamp arm lever shaft
10. Work clamp arm lever
11. Work clamp

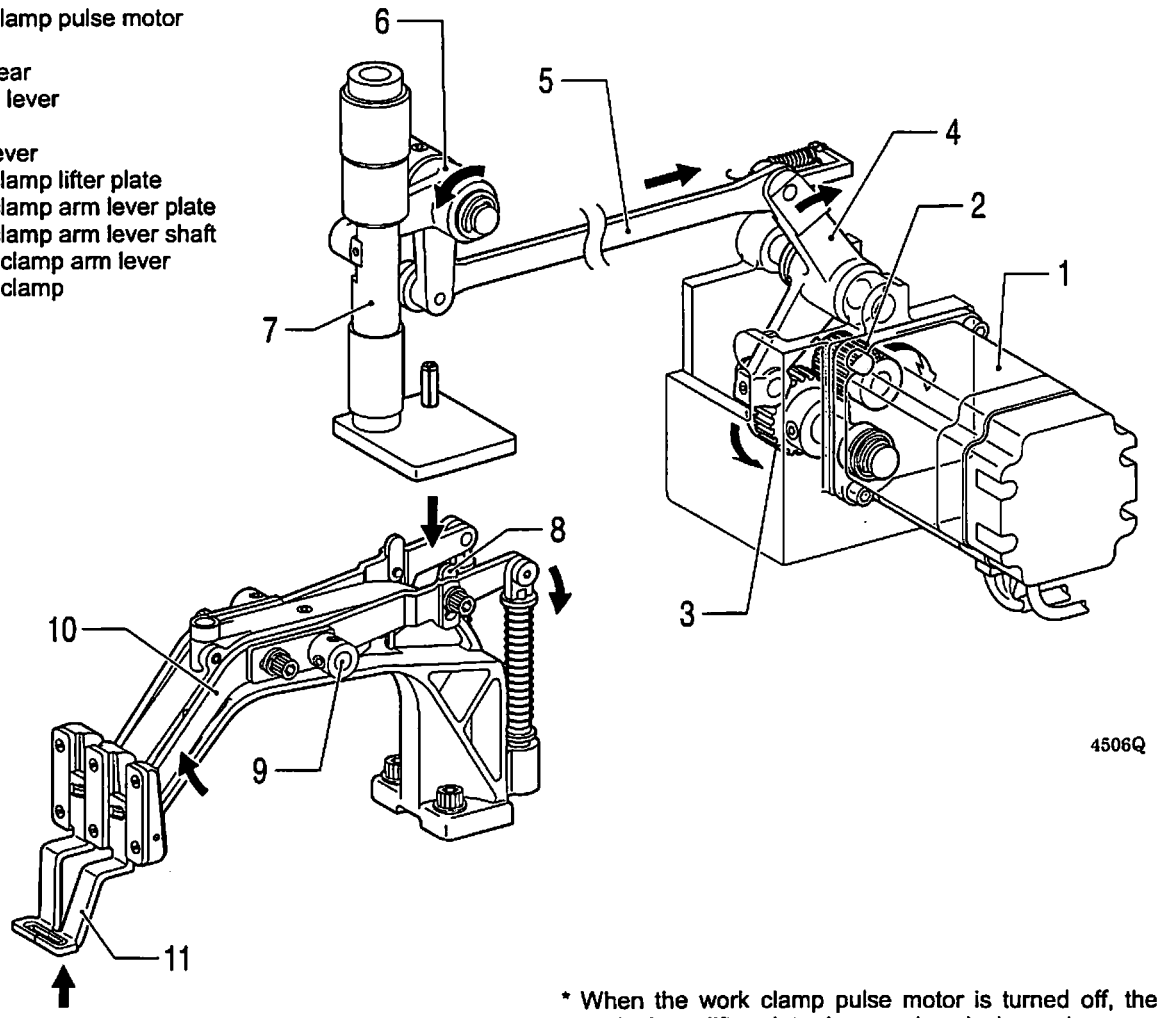


* When the work clamp pulse motor is turned off, the work clamp lifter plate rises, and work clamps lower.

BE-438D

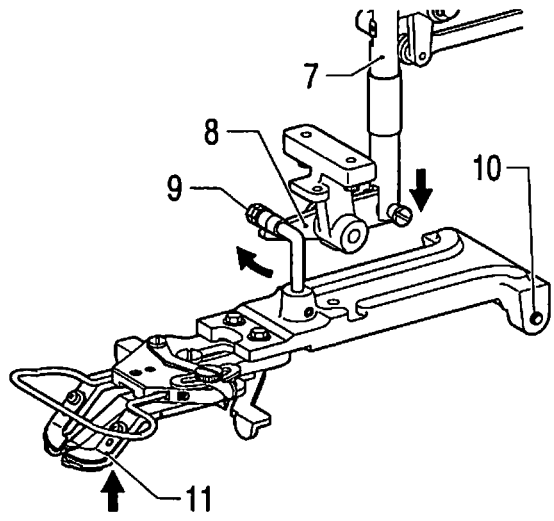


7.Button clamp rod
8.Button clamp lever
9. Button clamp holder hook assy
10. Button clamp holder shaft
11. Button clamp

* When the work clamp pulse motor is turned off, the button clamp rod rises, and button clamps lower.

## 4-4. Thread wiper mechanism

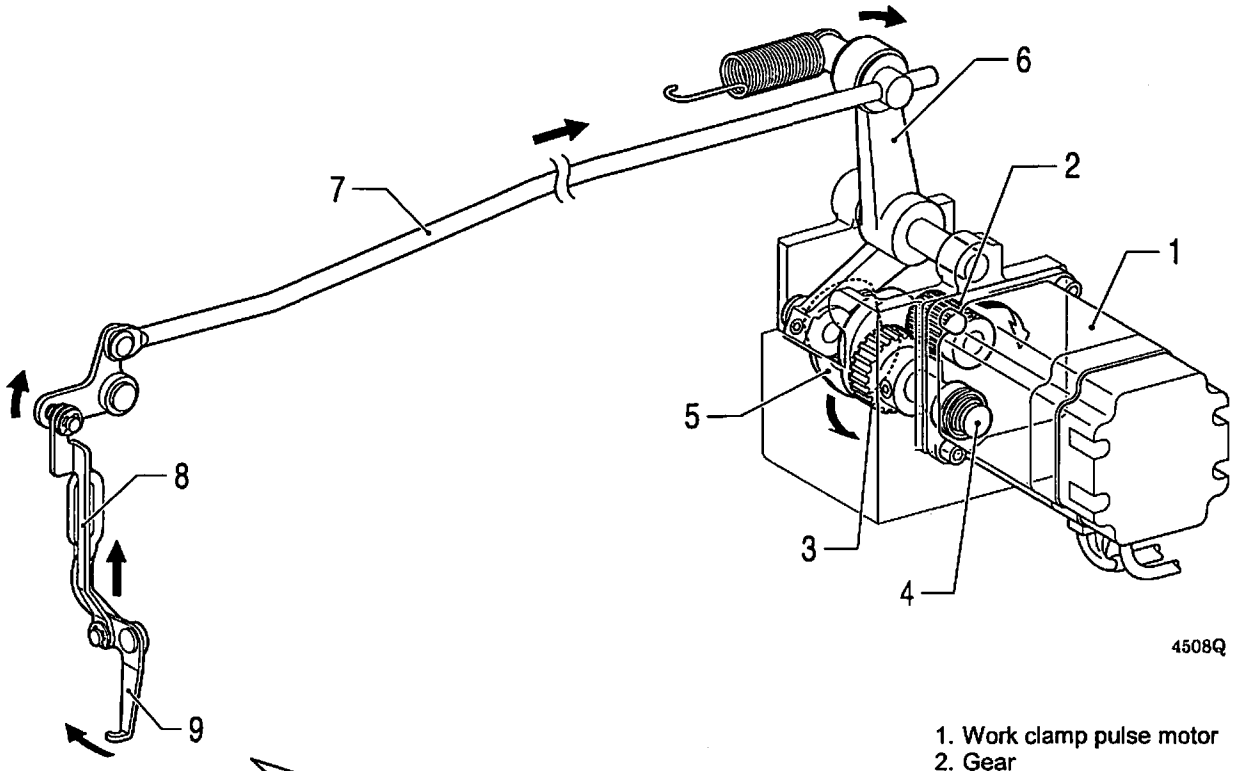


When the work clamp pulse motor is turned off, the thread wiper operates in the opposite direction.

1. Work clamp pulse motor
2. Gear
3. Cam gear
4. Cam shaft
5. Thread wiper cam
6. Driving lever
7. Wiper rod
8. Connecting plate
9. Wiper

## 4-5. Feed mechanism

Sewing patterns are created through combinations of X and Y movements.

X direction

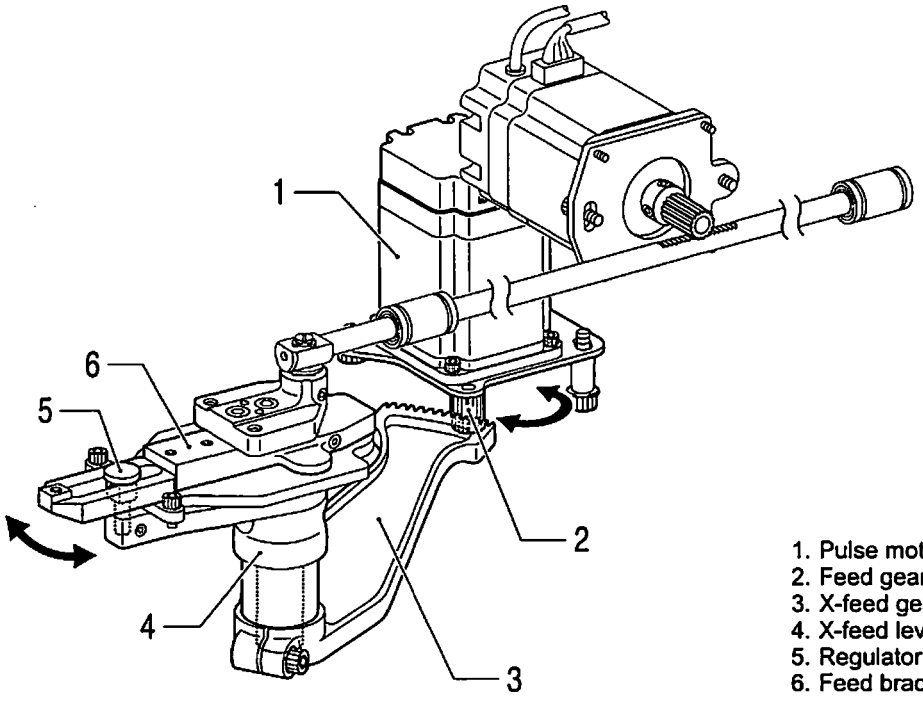


1. Pulse motor X assy
2. Feed gear
3. X-feed gear
4. X-feed lever
5. Regulator block assy
6. Feed bracket sub assy

Y direction

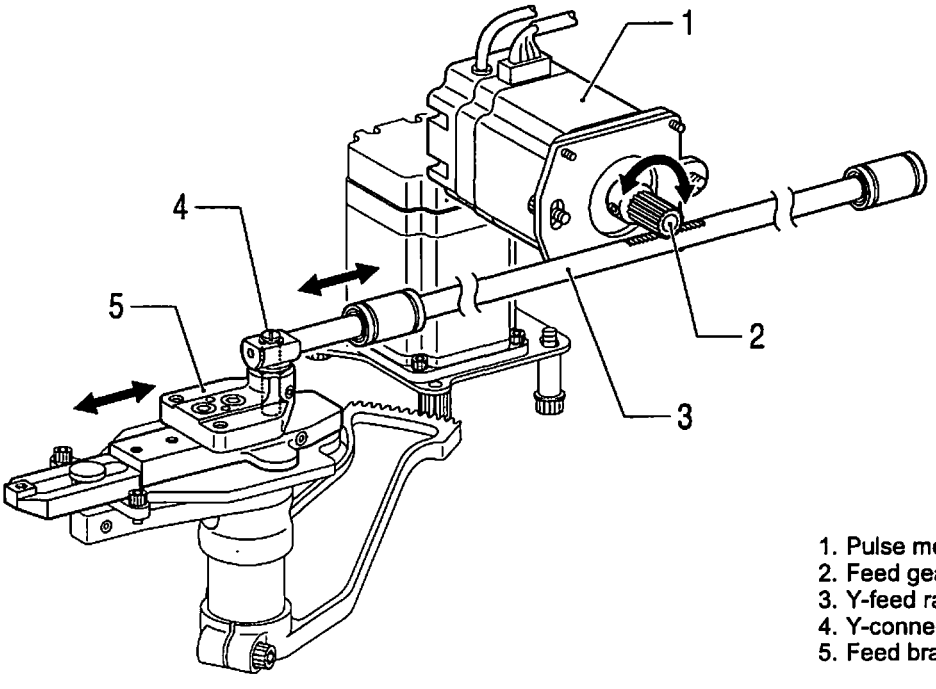


1. Pulse motor Y assy
2. Feed gear
3. Y-feed rack shaft
4. Y-connecting pin
5. Feed bracket sub assy

## 4-6. Thread trimmer mechanism

4511Q

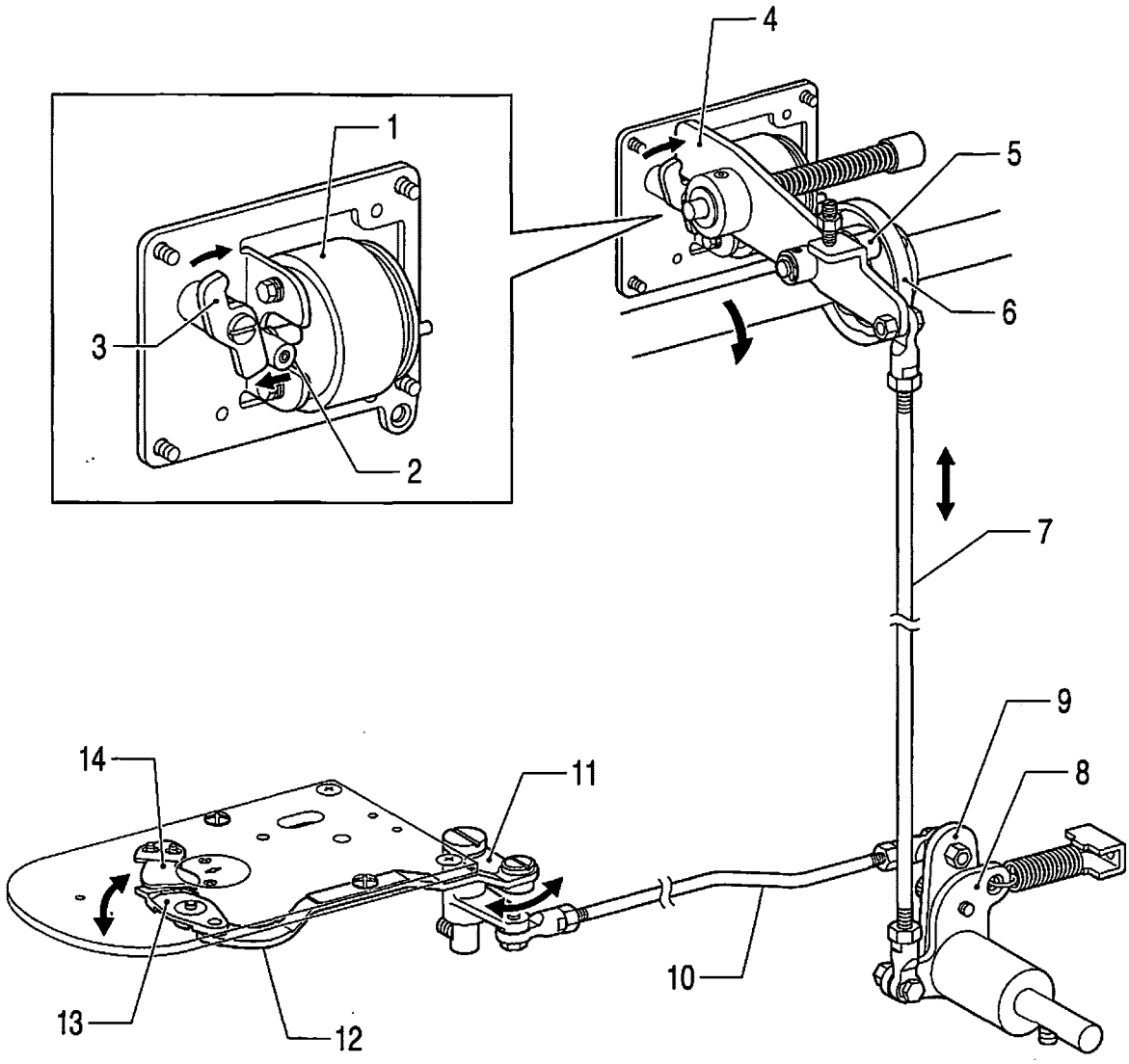


1. Thread trimmer solenoid assy
2. Solenoid lever
3. Pushing lever
4. Driving lever
5. Thread trimmer collar
6. Thread trimmer cam
7. Thread trimmer rod V
8. Thread trimmer lever V
9. Thread trimmer lever H
10. Thread trimmer rod H
11. Movable knife lever
12. Movable knife connecting plate
13. Movable knife
14. Fixed knife

## 4-7. Tension release mechanism

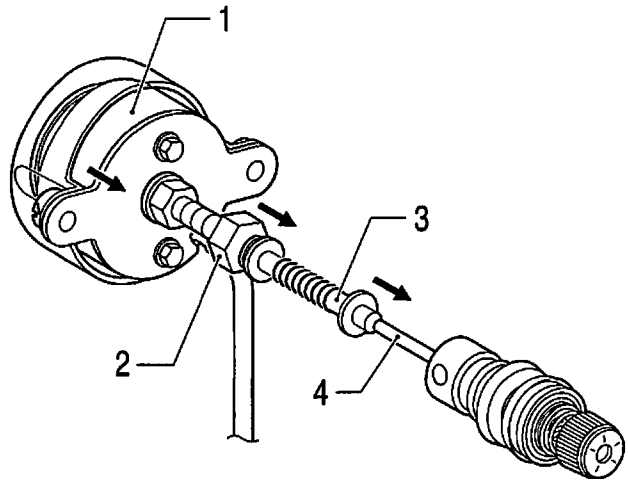


4512Q

1. Tension release solenoid
2. Bolt
3. Tension release bar
4. Tension release pin

## 4-8. Thread nipper mechanism

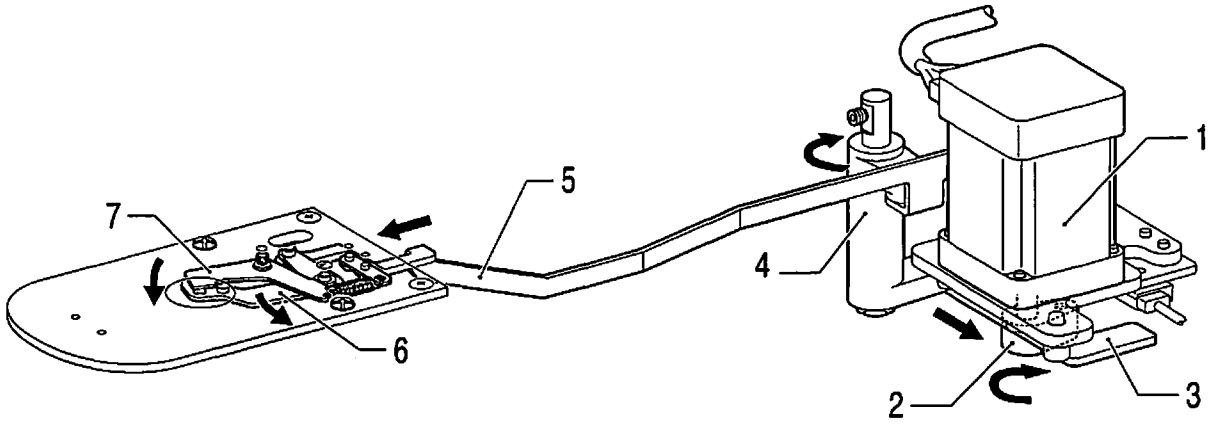


4513Q

1. Thread nipper pulse motor assy
2. Motor lever
3. Connecting plate B
4. Thread nipper lever
5. Connecting plate F assy
6. Thread nipper D assy
7. Thread nipper U

# 5. DISASSEMBLY

## ⚠ CAUTION

- Disassembly should only be carried out by a qualified technician.
- Turn off the power switch before disassembly, otherwise the machine may operate if the foot switch is depressed by mistake, which could result in injury.
- Be sure to wear protective goggles and gloves when handling the lubricating oil and grease, so that they do not get into your eyes or onto your skin, otherwise inflammation can result.
  Furthermore, do not drink the oil or eat the grease under any circumstances, as they can cause vomiting and diarrhea.
  Keep the oil out of the reach of children.
- Use only the proper replacement parts as specified by Brother.
- If any safety devices have been removed, be absolutely sure to re-install them to their original positions and check that they operate correctly before using the machine.
- Any problems in machine operation which result from unauthorized modifications to the machine will not be covered by the warranty.

Disassemble each part in order of the numbers.

## 5-1. Covers

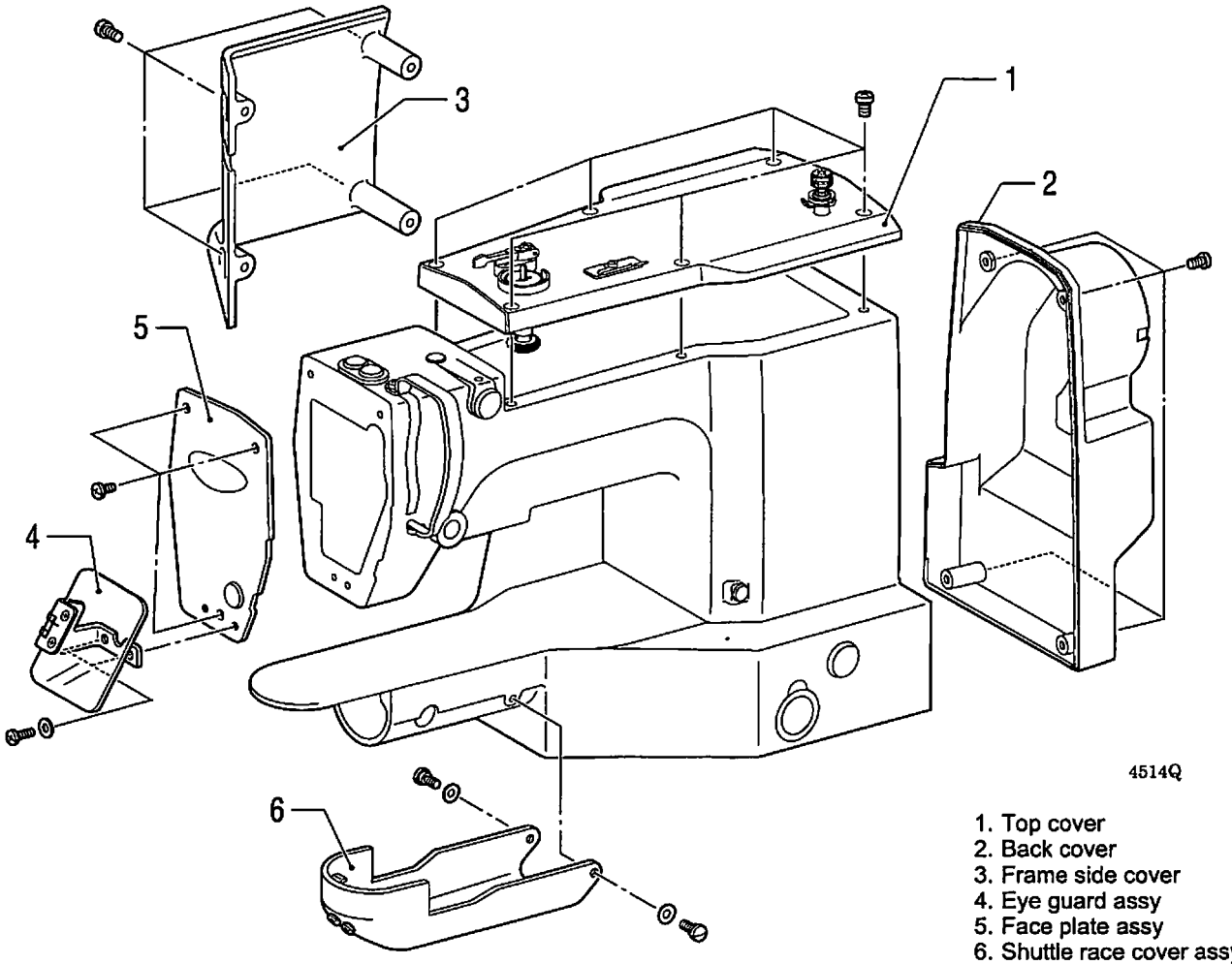


1. Top cover
2. Back cover
3. Frame side cover
4. Eye guard assy
5. Face plate assy
6. Shuttle race cover assy

## 5-2. Work clamp arm mechanism

KE-430D

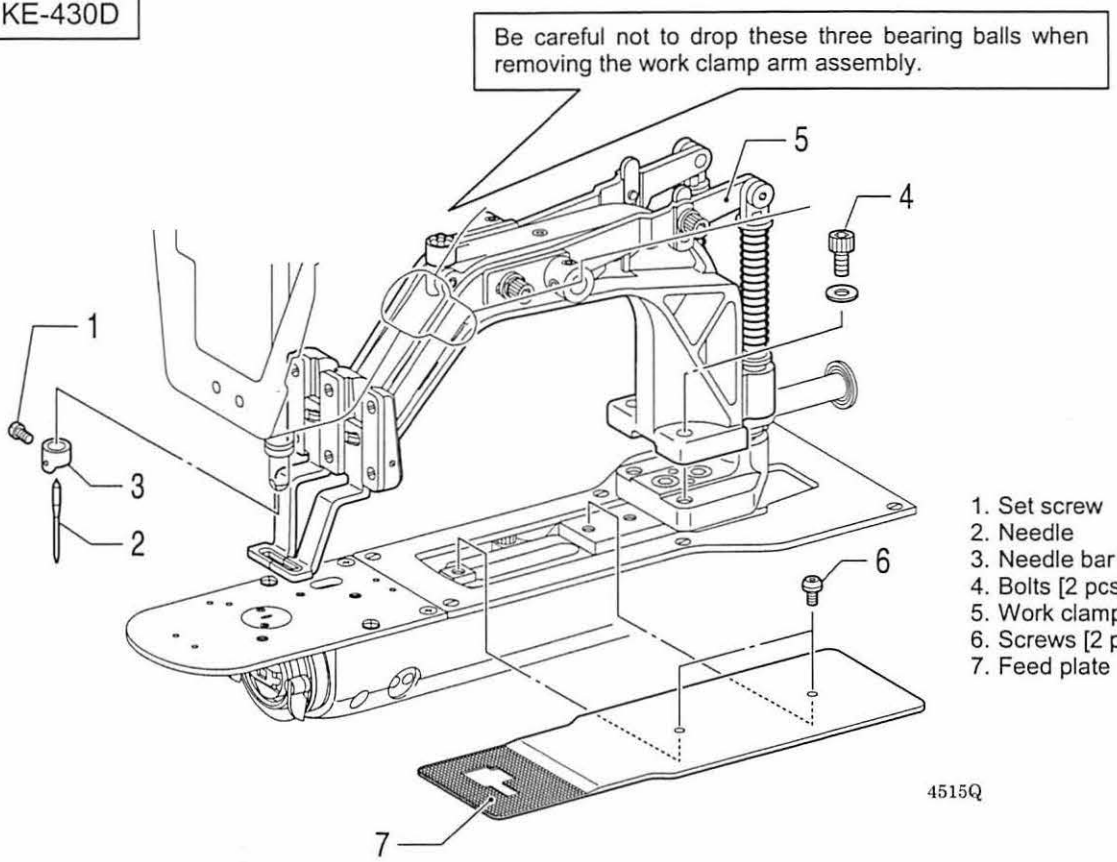


1. Set screw
2. Needle
3. Needle bar thread guide
4. Bolts [2 pcs]
5. Work clamp arm assy
6. Screws [2 pcs]
7. Feed plate

BE-438D

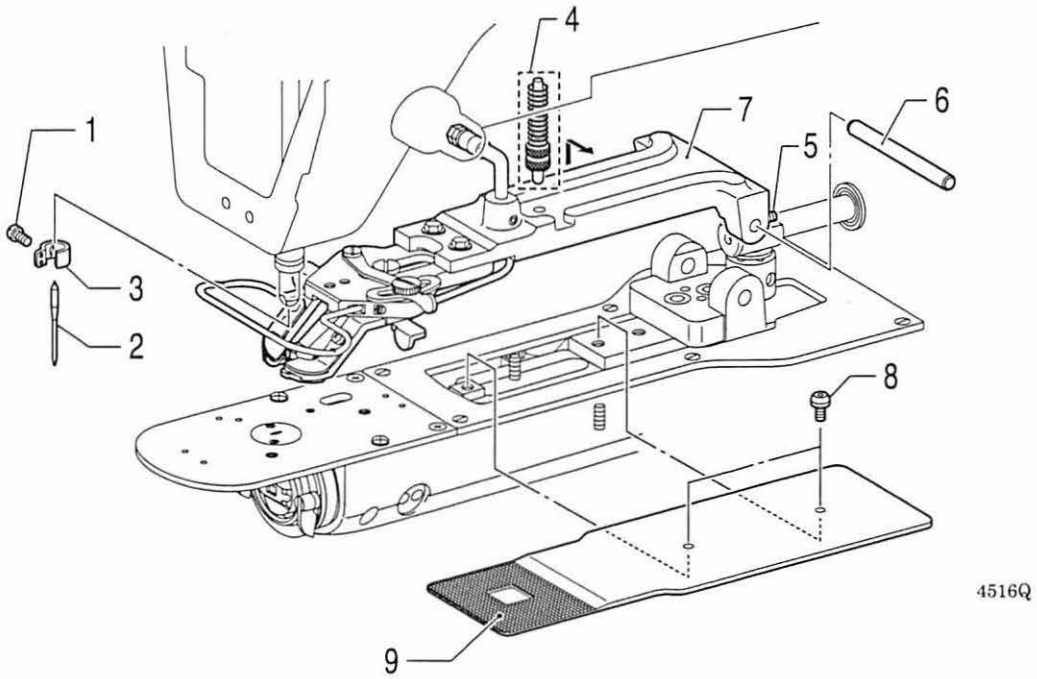


1. Set screw
2. Needle
3. Needle bar thread guide
4. Nuts [2 pcs]
   Adjusting screw
   Compression spring [Push upward and remove horizontally]
5. Set screws [2 pcs: Loosen]
6. Button clamp holder shaft
7. Button clamp holder
8. Screws [2 pcs]
9. Feed plate

## 5-3. Needle bar mechanism

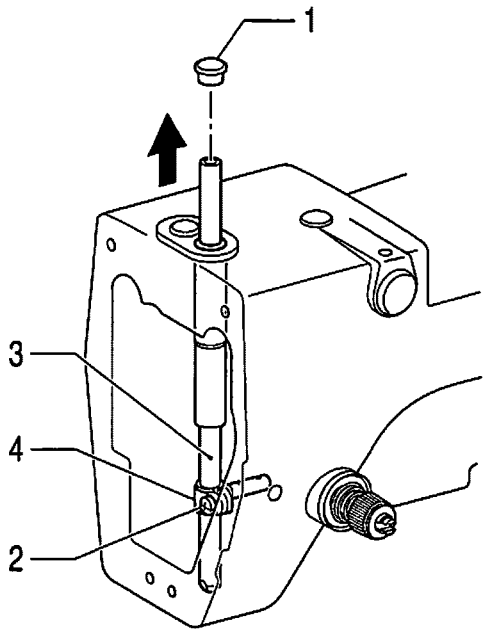


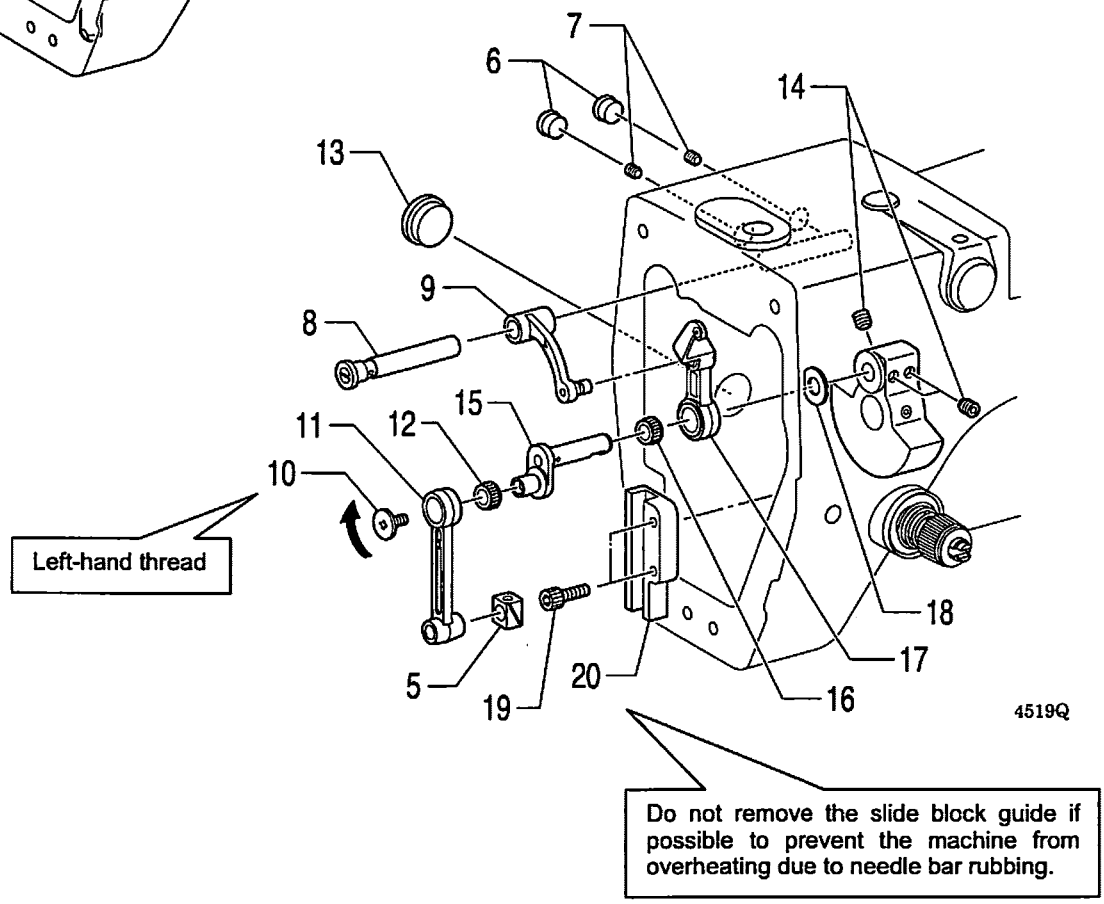


1. Rubber cap
2. Screw
3. Needle bar
4. Needle bar clamp [Pull out]
5. Slide block
6. Rubber caps [2 pcs]
7. Set screws [2 pcs : Loosen]
8. Thread take-up support shaft assy
9. Thread take-up support
10. Screw [Loosen]
11. Needle bar connecting rod
12. Needle bearing
13. Oil cap
14. Set screws [3 pcs : Loosen]
15. Needle bar crank
16. Needle bearing
17. Thread take-up lever assy
18. Washer
19. Bolts [2 pcs]
20. Slide block guide

## 5-4. Upper shaft mechanism

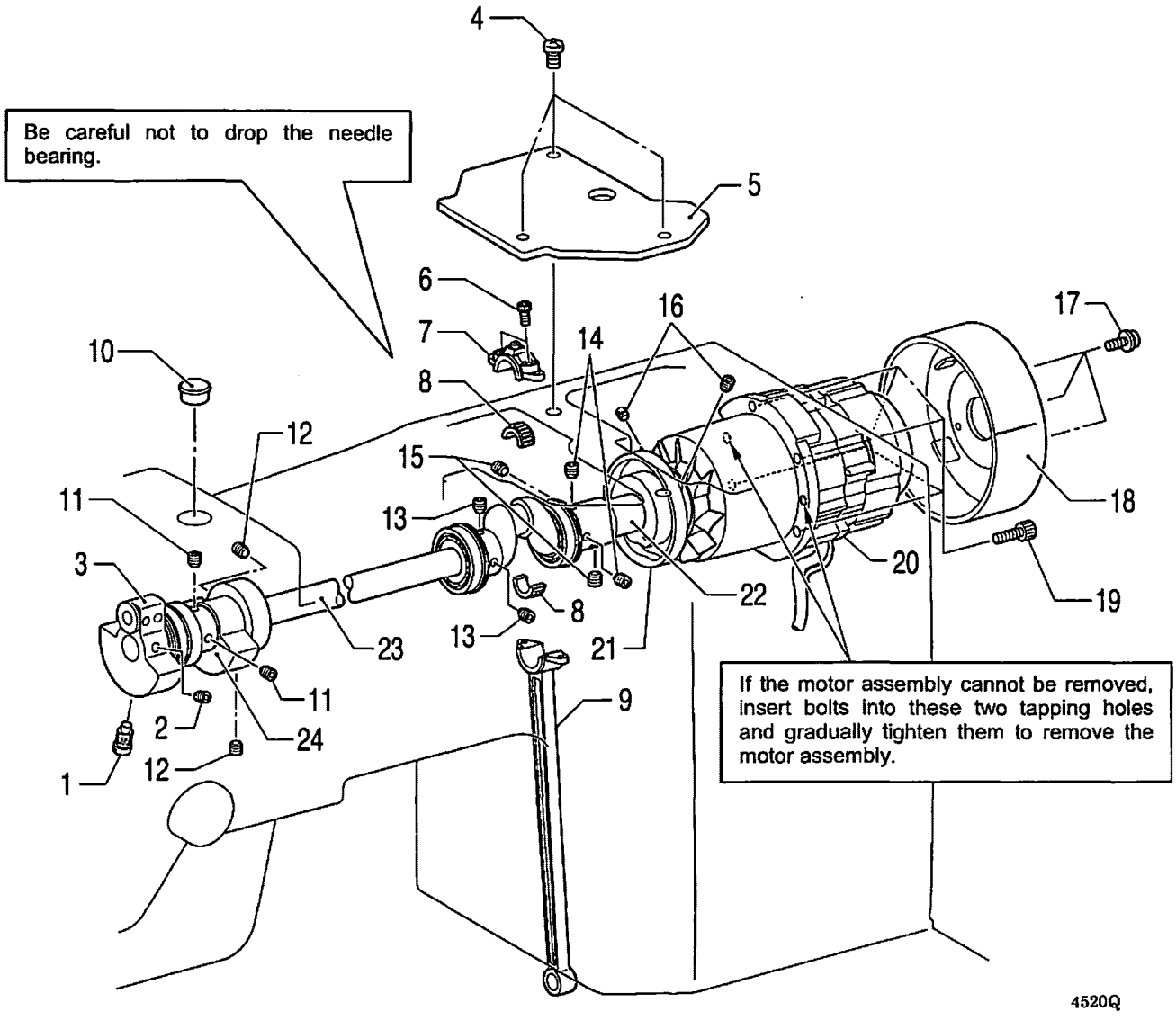


1. Screw [Loosen]
2. Set screw [Loosen]
3. Thread take-up crank
4. Screws [3 pcs: Loosen]
5. Crank cover
6. Bolts [2 pcs]
7. Crank rod (Upper part)
8. Needle bearing
9. Crank rod (Lower part) [Lower downward]
10. Rubber cap
11. Set screws [2 pcs: Loosen]
12. Set screws [2 pcs: Loosen]
13. Set screws [2 pcs: Loosen]
14. Set screws [2 pcs: Loosen]
15. Set screws [2 pcs: Loosen]
16. Set screws [2 pcs: Loosen]
17. Screws with washers [3 pcs: Loosen]
18. Pulley
19. Bolts [4 pcs: Loosen]
20. Motor assy
21. Thread trimmer cam
22. Joint assy
23. Upper shaft
24. Bobbin winder driving wheel

## 5-5. Lower shaft mechanism

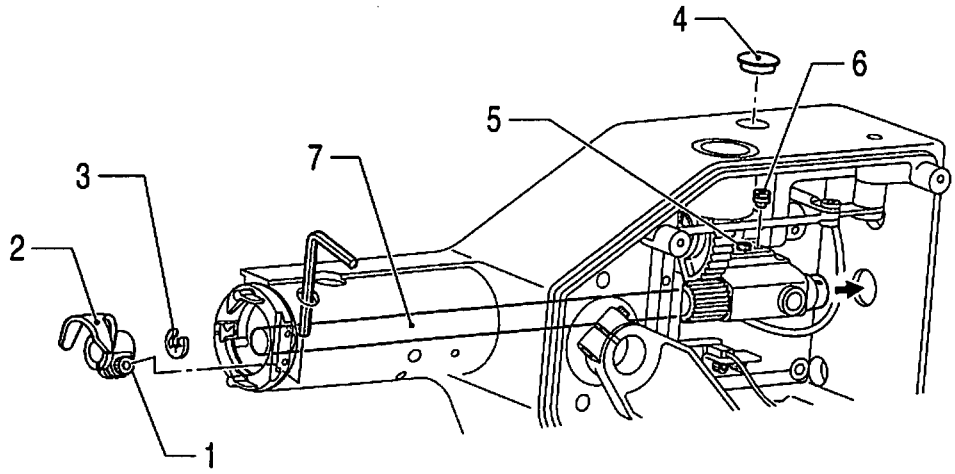


4521Q

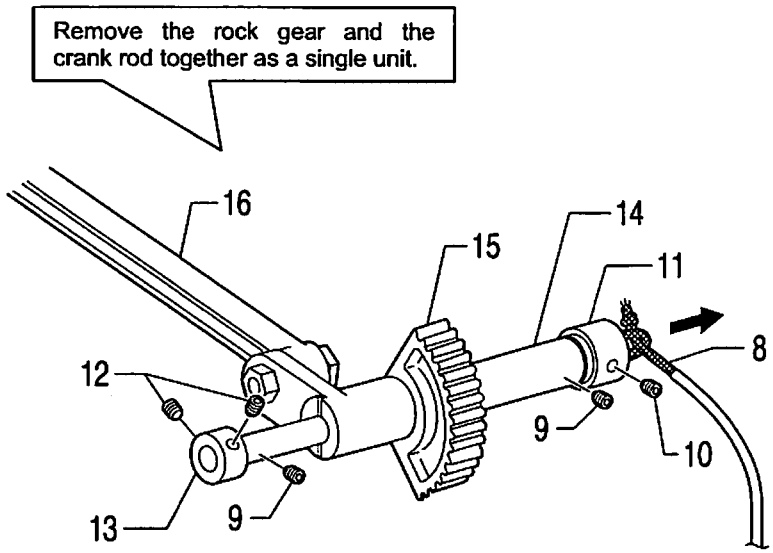


4522Q

1. Bolt [Loosen]
2. Driver
3. Retaining ring, E
4. Oil cap
5. Set screw [Loosen]
6. Adjusting stud [Pull out]
7. Lower shaft assy [Pull out from the rear of the machine]
8. Wick
9. Set screws [2 pcs: Loosen]
10. Set screw [Loosen]
11. Set screw collar, R
12. Set screws [2 pcs: Loosen]
13. Set screw collar, B
14. Rock gear shaft [Pull out from the rear of the machine]
15. Rock gear
16. Crank rod (Lower part)

## 5-6. Feed mechanism

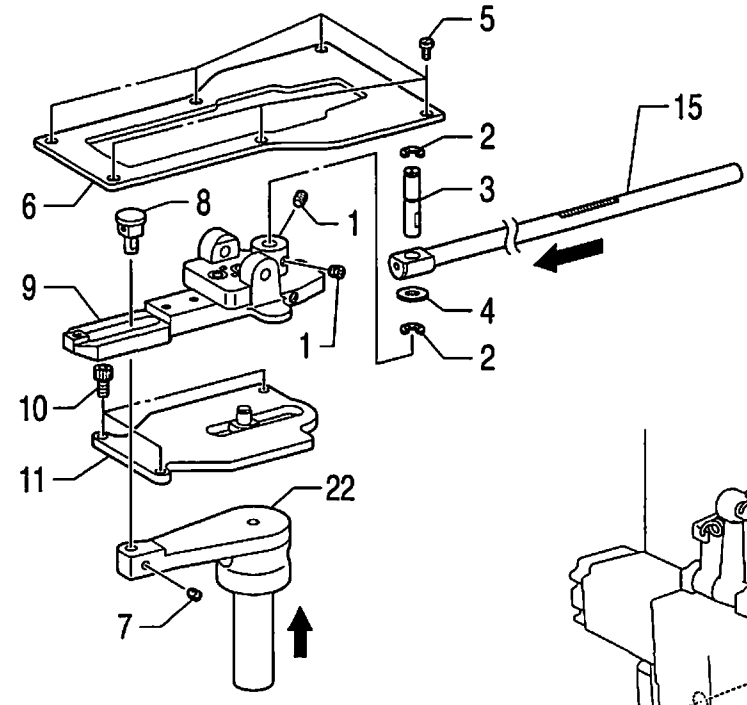


4523Q

4524Q

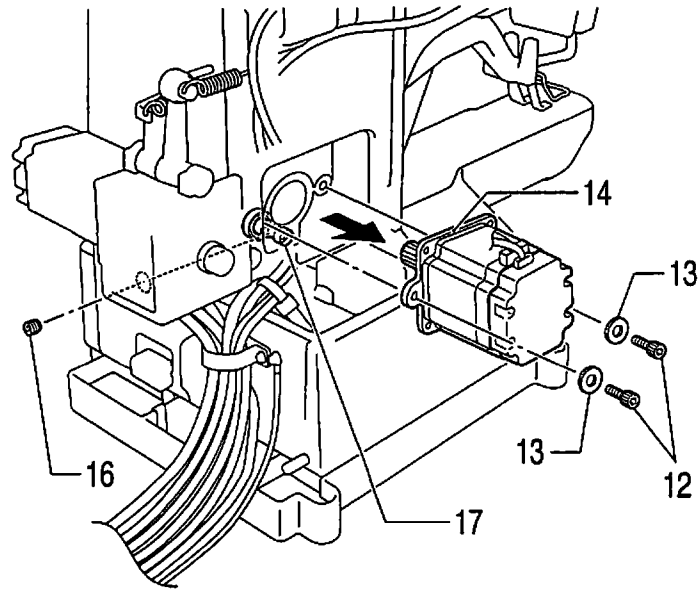


1. Set screws [2 pcs: Loosen]
2. Retaining rings [2 pcs]
3. Y-connecting pin [Pull upward]
4. Thrust washer
5. Screws [6 pcs]
6. Feed bracket cover
7. Set screw [Loosen]
8. Regulator block assy
9. Feed bracket sub assy
10. Bolts [3 pcs]
11. Feed bracket support plate
12. Bolts [2 pcs]
13. Plain washers [3 pcs]
14. Y-motor setting plate [Pulse motor Y assy]
15.Y-feed rack shaft
16. Set screw [Loosen]
17. Eccentric shaft
18. Bolt
19. X-feed gear
20. Bolts [3 pcs]
21. X-motor setting plate [Pulse motor X assy]
22. X-feed lever [Pull upward]

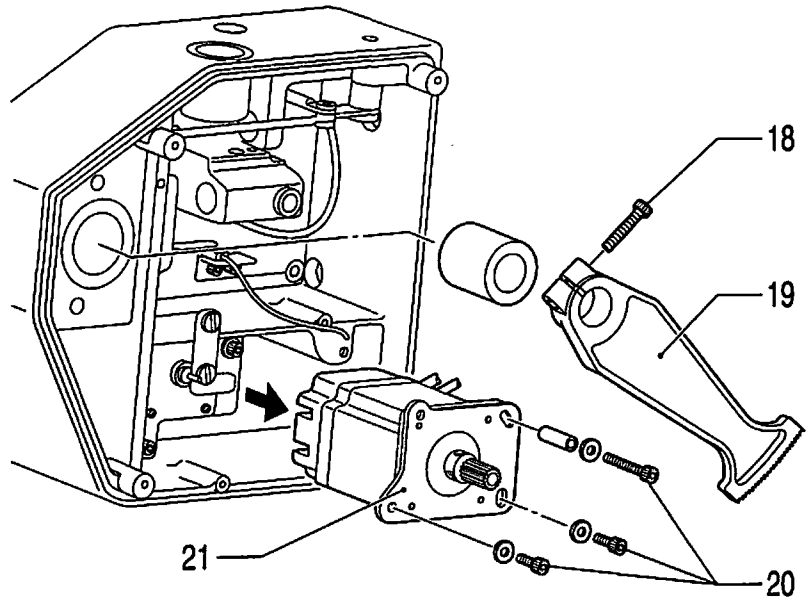


4525Q

## 5-7. Work clamp lifter mechanism

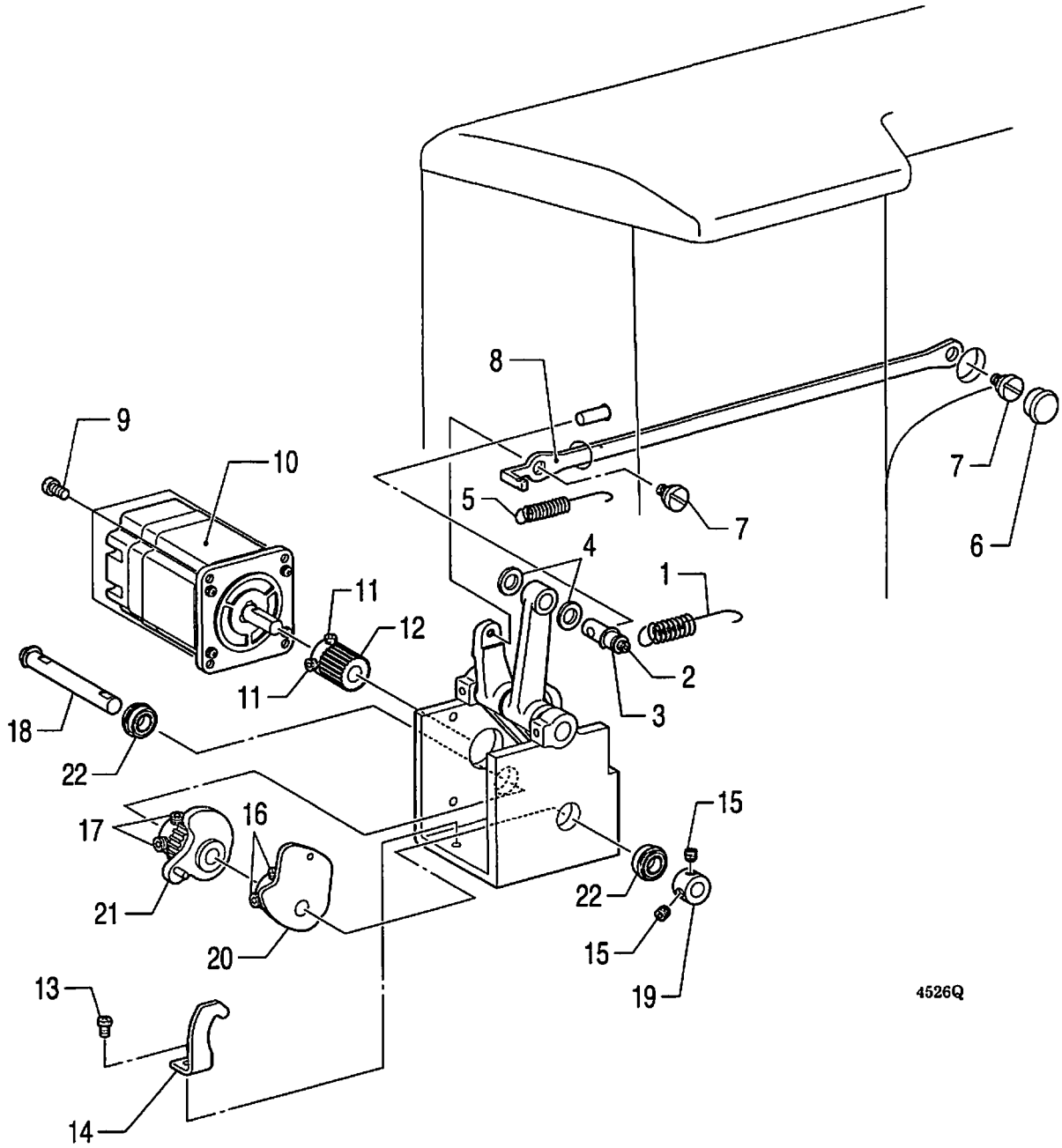


1. Spring
2. Set screw [Loosen]
3. Thread wiper rod shaft
4. Plain washers [2 pcs]
5. Spring
6. Rubber cap
7. Link shoulder screws [2 pcs]
8. Link [Pull backward]
9. Bolts [4 pcs]
10. Pulse motor P assy [Disconnect the harness]
11. Set screws [2 pcs: Loosen]
12. Gear
13. Screw
14. Stopper
15. Set screws [2 pcs: Loosen]
16. Set screws [2 pcs: Loosen]
17. Set screws [2 pcs: Loosen]
18. Cam shaft
19. Set screw collar, B
20. Thread wiper cam
21. Cam gear
22. Ball bearings [2 pcs]

KE-430D

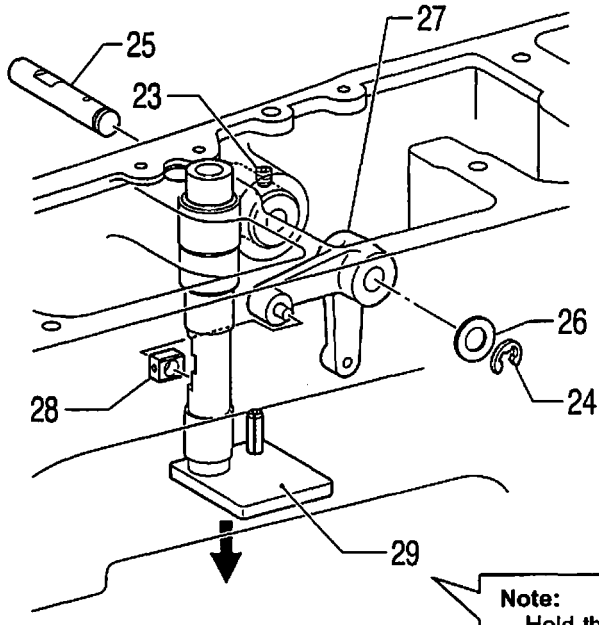


4527Q

23. Set screw [Loosen]
24. Retaining ring, E
25. Lever shaft
26. Plain washer
27. Lifter lever
28. Needle bar guide slide block
29. Work clamp lifter plate

**Note:**
Hold the work clamp lifter plate when removing lifter lever, otherwise the work clamp lifter plate may fall down.

BE-438D

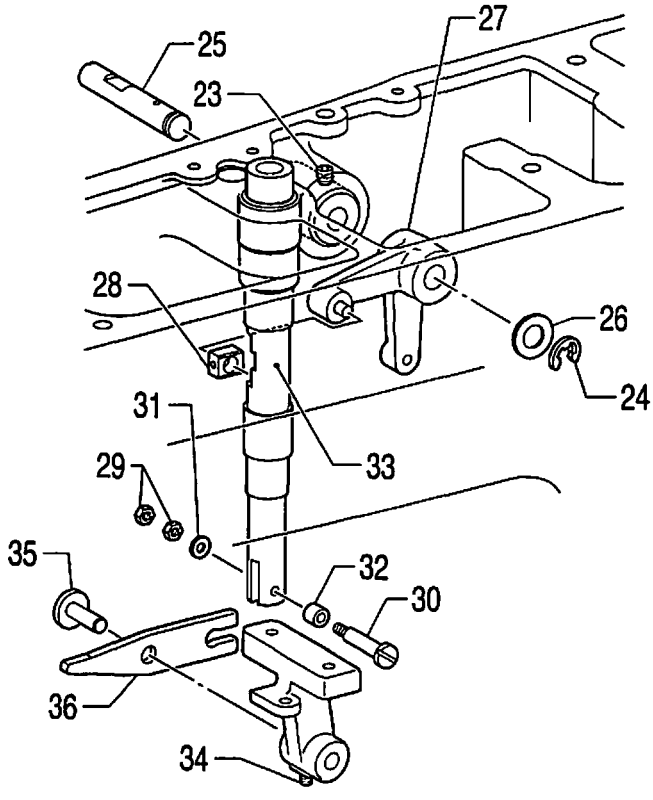


4528Q

23. Set screw [Loosen]
24. Retaining ring, E
25. Lever shaft
26. Plain washer
27. Lifter lever
28. Needle bar guide slide block
29. Nuts [2 pcs]
30. Button clamp roller shaft
31. Plain washer
32. Roller
33. Button clamp rod [Pull upward]
34. Set screw [Loosen]
35. Button clamp lever shaft [Pull out]
36. Button clamp lever

## 5-8. Thread wiper mechanism

4529Q

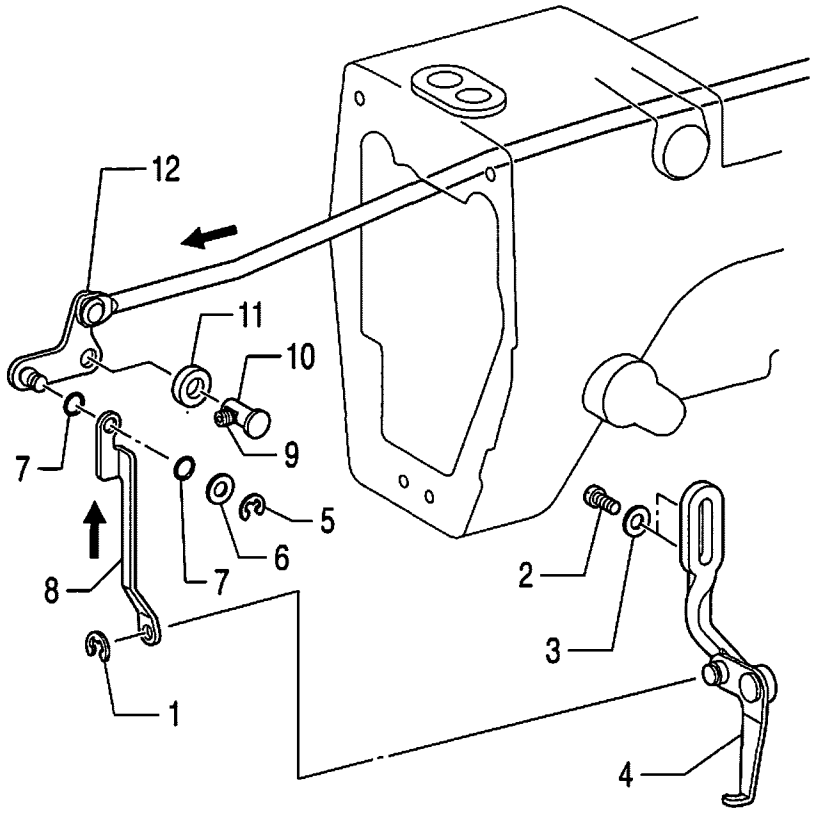


1. Retaining ring, E
2. Screws [2 pcs]
3. Plain washers [2 pcs]
4. Thread wiper arm assy
5. Retaining ring, E
6. Plain washer
7. O rings [2 pcs]
8. Connecting plate [Pull upward]
9. Set screw [Loosen]
10. Work clamp lifter roller shaft
11. Collar
12. Thread wiper rod assy [Pull forward]

## 5-9. Tension release mechanism

1. Set screw [Loosen]
2. Tension bracket [Pull out]
3. Tension release pin
4. Shoulder screws [2 pcs]
5. Solenoid cover
6. Tension release solenoid
7. Bolts [2 pcs]
8. Spring washers [2 pcs]
9. Plain washers [2 pcs]
10. Solenoid setting plate
11. Bolt
12. Nut
13. Plain washer
14. Solenoid cushion
15. Tension release bar
16. Plain washers [2 pcs]
17. Spring
18. Retaining ring, E

4530Q

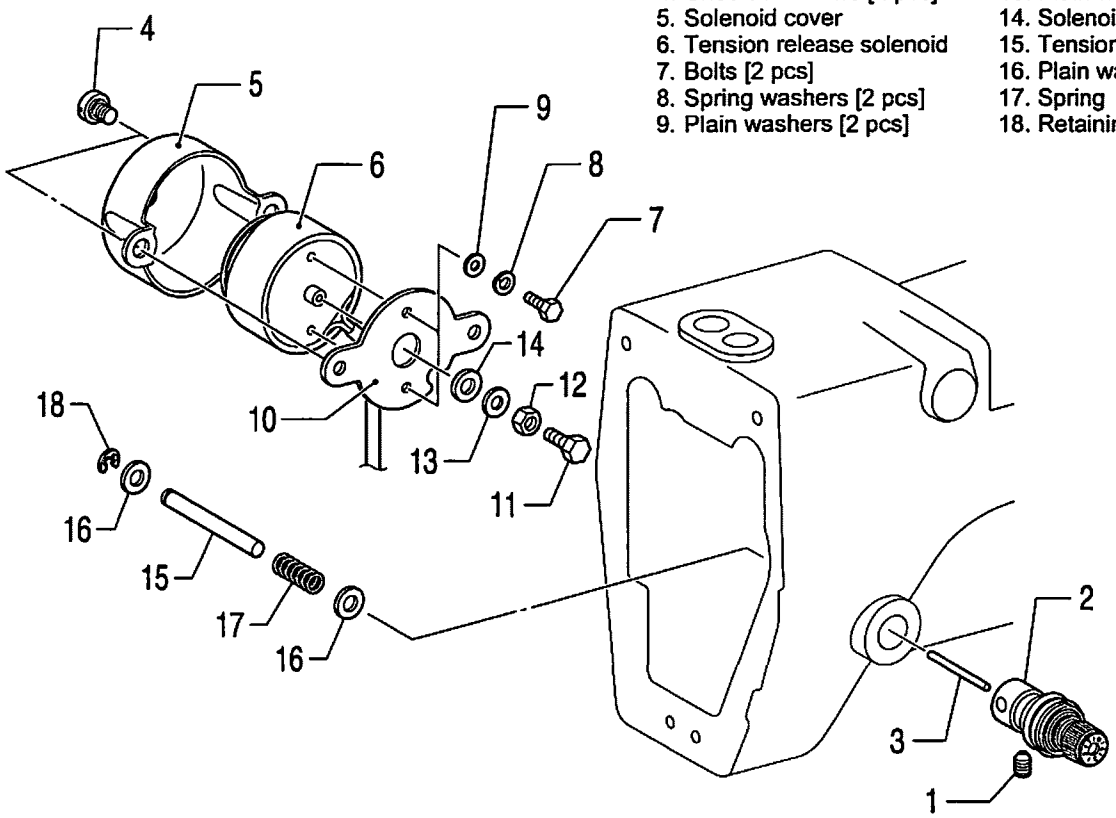

## 5-10. Thread nipper mechanism

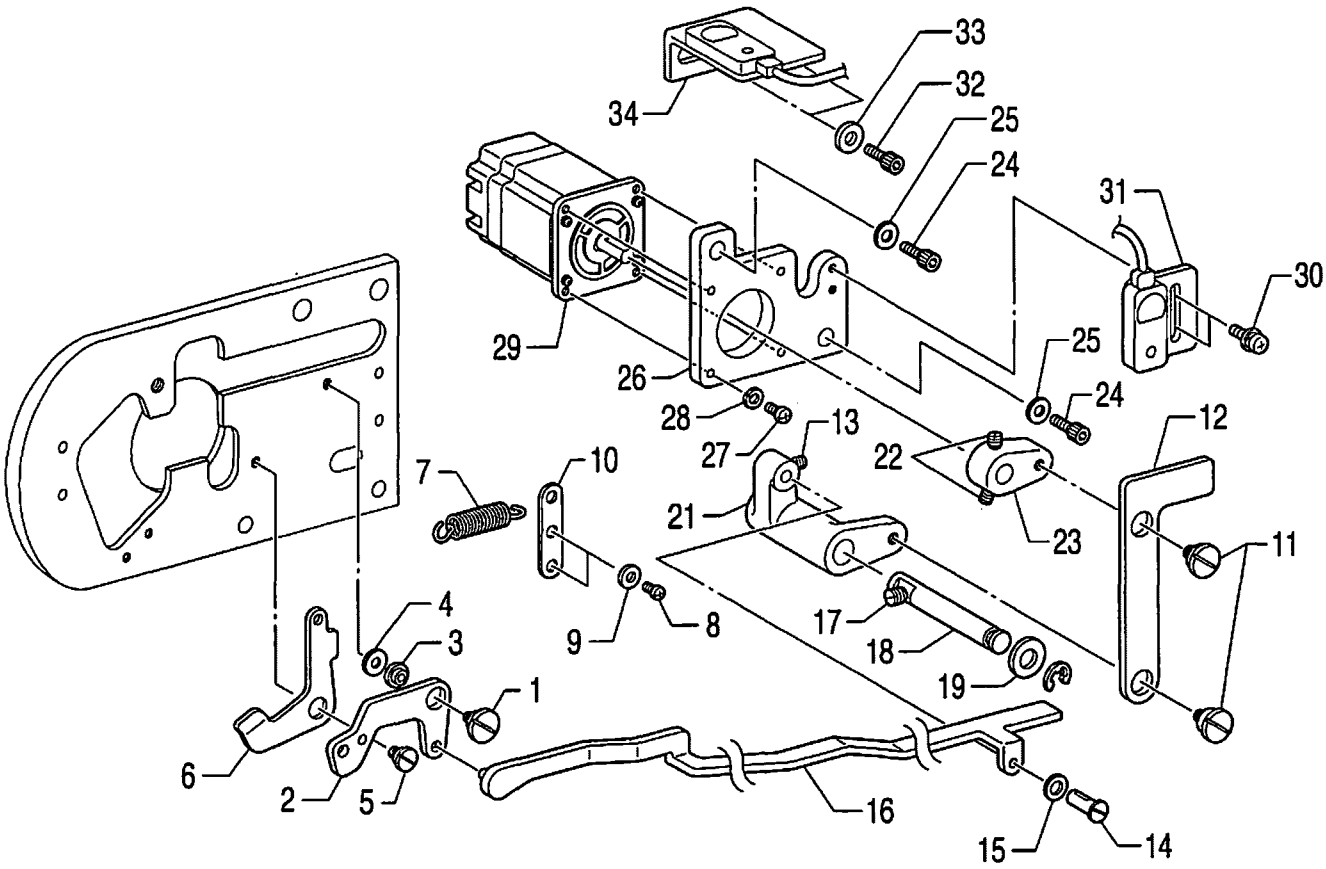


4531Q

1. Shoulder screw
2. Thread nipper D assy
3. Collar
4. Spacer
5. Shoulder screw
6. Thread nipper U
7. Spring
8. Screws [2 pcs]
9. Plain washers [2 pcs]
10. Spring hook plate
11. Shoulder screws [2 pcs]
12. Connecting plate B
13. Set screw [Loosen]
14. Lever shaft
15. Plain washer
16. Connecting plate F assy
17. Set screw [Loosen]
18. Thread nipper lever shaft
19. Washer
20. Retaining ring, E
21. Thread nipper lever
22. Set screws [2 pcs: Loosen]
23. Motor lever
24. Bolts [2 pcs]
25. Plain washers [2 pcs]
26. TN-motor setting plate
27. Screws [4 pcs]
28. Spring washers [4 pcs]
29. Thread nipper pulse motor assy
30. Screws with washers [2 pcs]
31. TN-sensor setting plate F
32. Bolts [2 pcs]
33. Plain washers [2 pcs]
34. TN-sensor setting plate B

## 5-11. Thread trimmer mechanism

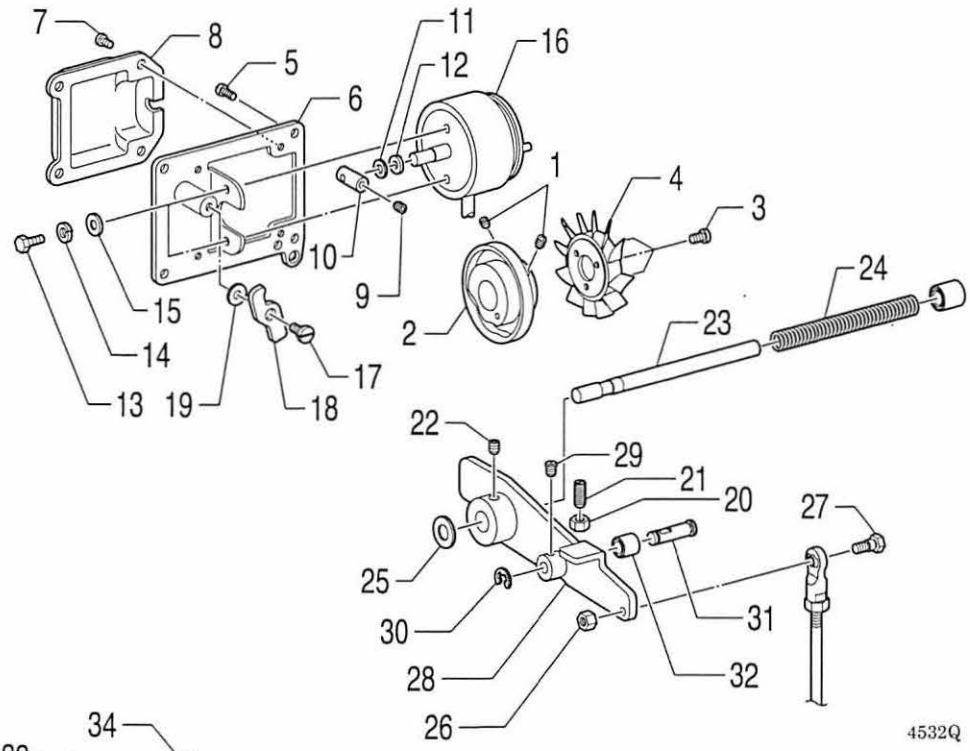


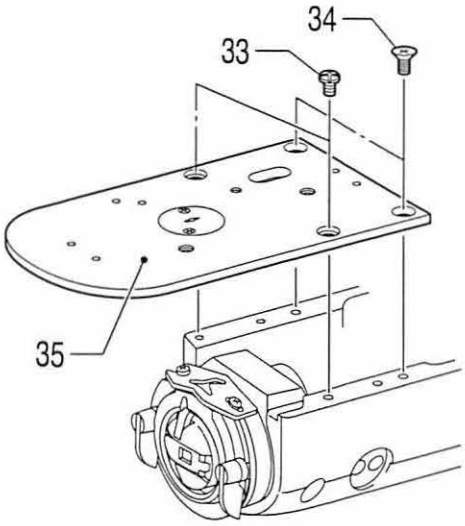


1. Set screws [2 pcs: Loosen]
2. Thread trimmer cam
3. Screws [3 pcs]
4. Fan
5. Screws [4 pcs]
6. Solenoid setting plate
7. Screws [4 pcs]
8. Solenoid cover
9. Set screw
10. Solenoid lever
11. Washer
12. Solenoid cushion
13. Bolts [2 pcs]
14. Spring washers [2 pcs]
15. Plain washers [2 pcs]
16. Thread trimmer solenoid assy
17. Shoulder screw
18. Pushing lever
19. Washer
20. Nut
21. Set screw
22. Set screw
23. Guide shaft
24. Spring
25. Cushion
26. Nut
27. Shoulder screw B
28. Driving lever
29. Set screw
30. Retaining ring, E
31. Collar shaft
32. Thread trimmer collar
33. Screws [2 pcs]
34. Flat screws [2 pcs]
35. Needle plate

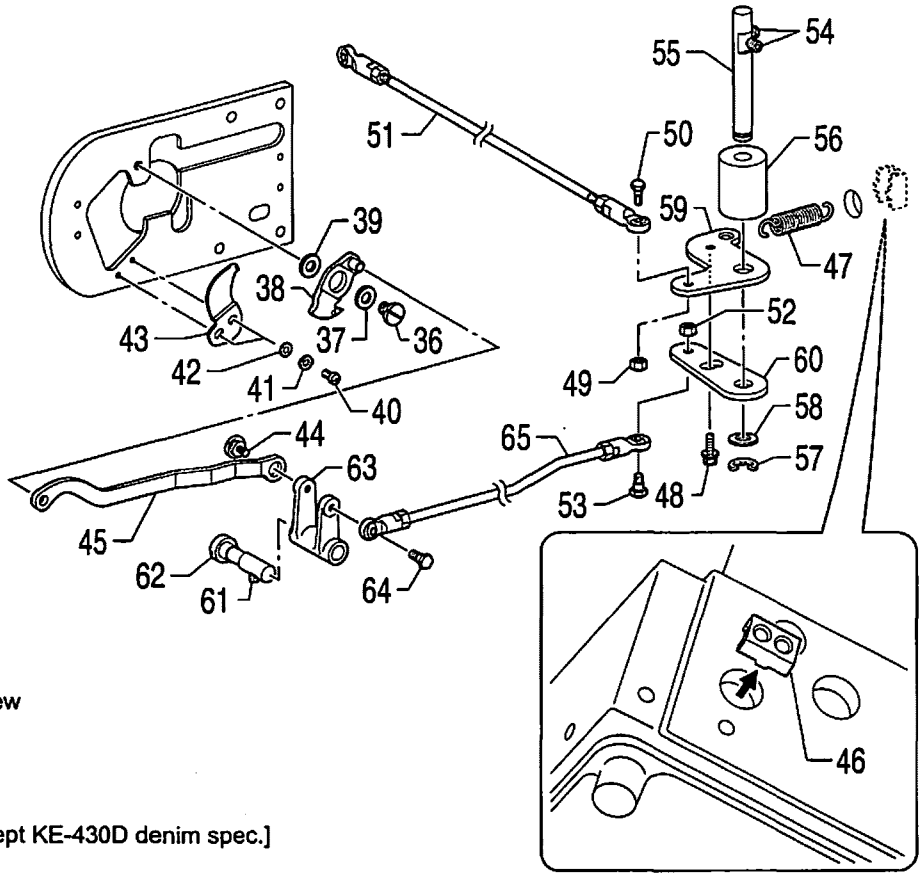


4533Q

36. Movable knife shoulder screw
37. Movable knife collar
38. Movable knife assy
39. Movable knife spacer
40. Screws [2 pcs]
41. Spring washers [2 pcs: except KE-430D denim spec.]
42. Plain washers [2 pcs]
43. Fixed knife
44. Shoulder screw
45. Connecting plate
46. Spring hook
47. Spring
48. Bolt with washer
49. Nut
50. Shoulder screw B
51. Thread trimmer rod V
52. Nut
53. Shoulder screw B
54. Set screw [Loosen]
55. Thread trimmer lever shaft
56. Thread trimmer lever spacer
57. Retaining ring, E
58. Washer
59. Thread trimmer lever V
60. Thread trimmer lever H
61. Set screw [Loosen]
62. Movable knife lever shaft
63. Movable knife lever
64. Shoulder screw
65. Thread trimmer rod H

## 5-12. Shuttle hook mechanism

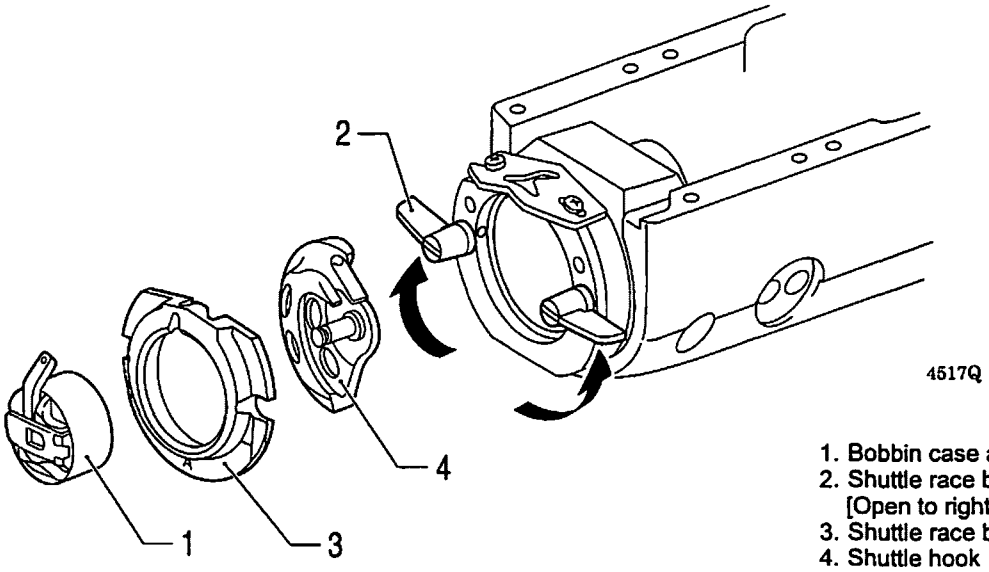


4517Q

1. Bobbin case assy
2. Shuttle race base setting claw [Open to right and left]
3. Shuttle race base
4. Shuttle hook

# 6. ASSEMBLY

Assemble each part in order of the numbers.

Apply grease to the required places when reassembling the parts and once every two years.

## 6-1. Thread trimmer mechanism (1)

Apply grease to the portions indicated by the white arrows.

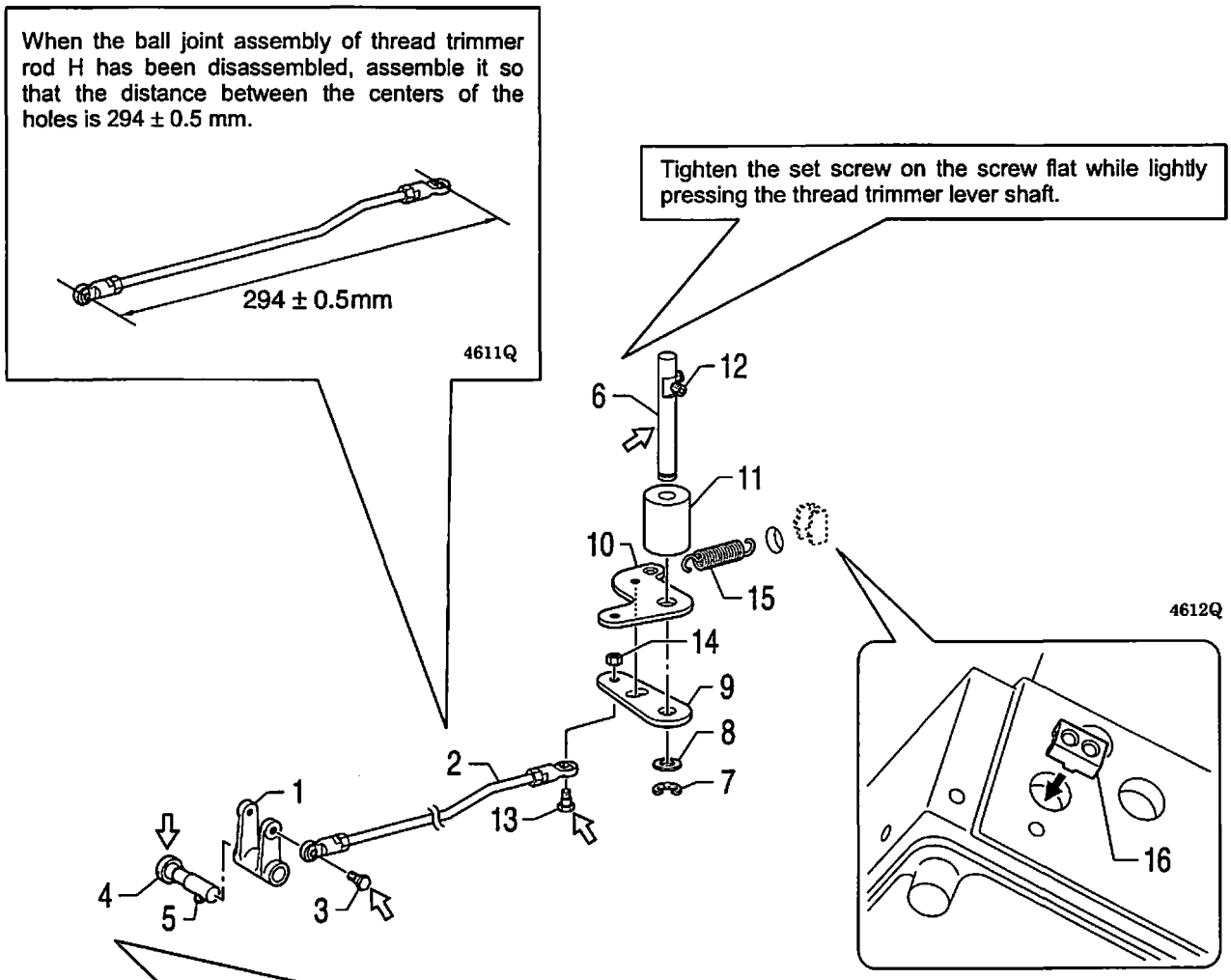


1. Movable knife lever
2. Thread trimmer rod H
3. Shoulder screw
4. Movable knife lever shaft
5. Set screw
6. Thread trimmer lever shaft
7. Retaining ring, E
8. Washer
9. Thread trimmer lever H
10. Thread trimmer lever V
11. Thread trimmer lever spacer
12. Set screw
13. Shoulder screw B
14. Nut
15. Spring
16. Spring hook

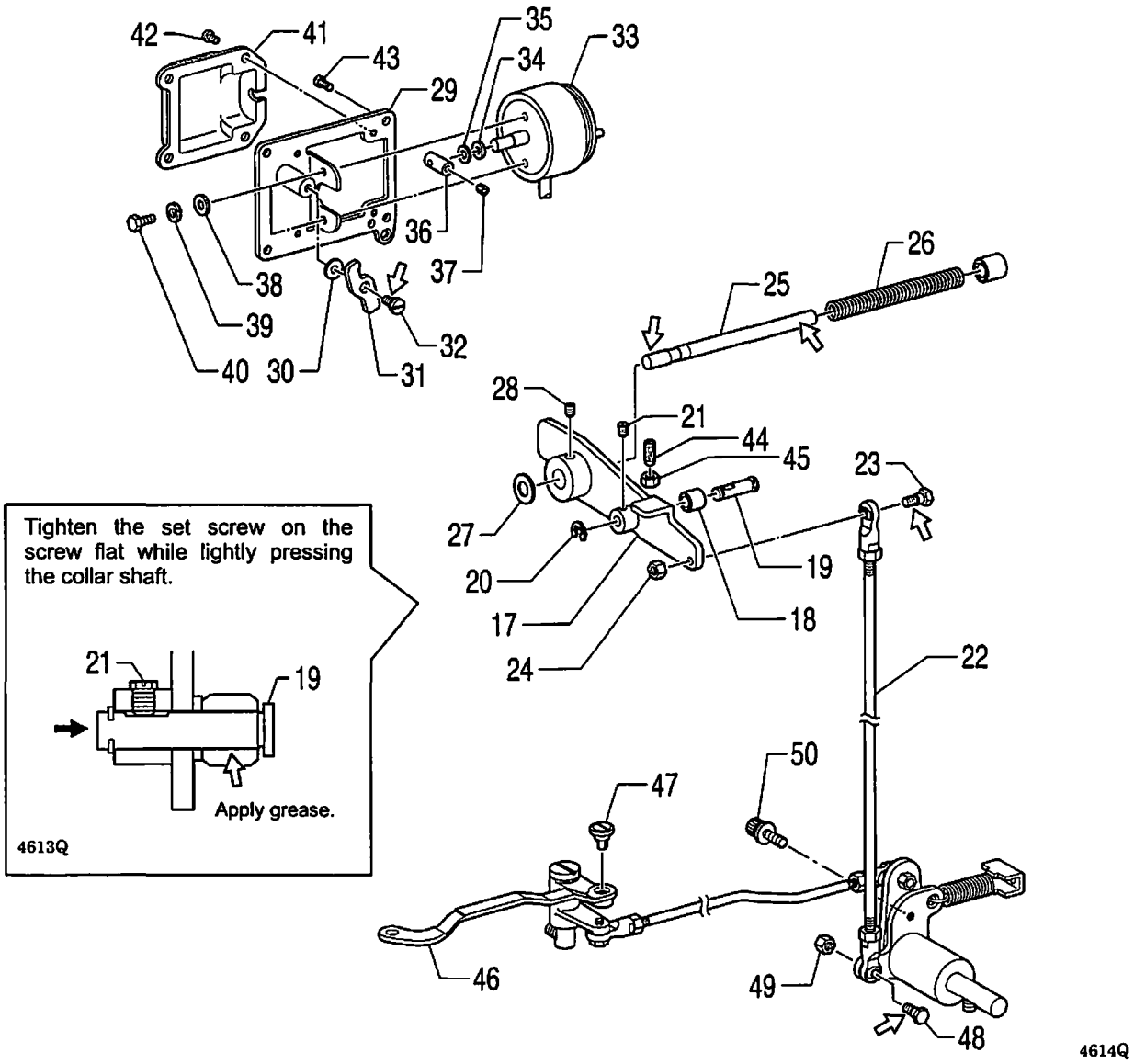


When the ball joint assembly of thread trimmer rod V has been disassembled, assemble it so that the distance between the centers of the holes is 288.5 ± 0.5 mm.

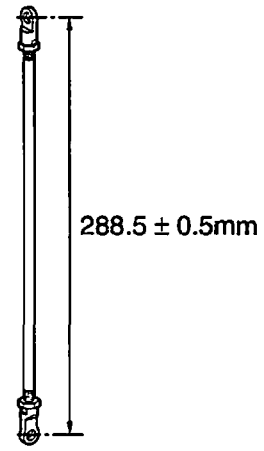


17. Driving lever
18. Thread trimmer collar
19. Collar shaft
20. Retaining ring, E
21. Set screw
22. Thread trimmer rod V
23. Shoulder screw B
24. Nut
25. Guide shaft
26. Spring
27. Cushion
28. Set screw
29. Solenoid setting plate
30. Washer
31. Pushing lever
32. Shoulder screw
33. Thread trimmer solenoid assy
34. Solenoid cushion
35. Washer
36. Solenoid lever
37. Set screw
38. Plain washers [2 pcs]
39. Spring washers [2 pcs]
40. Bolts [2 pcs]
41. Solenoid cover
42. Screws [4 pcs]
43. Screws [4 pcs]
44. Set screw
45. Nut
46. Connecting plate
47. Shoulder screw
48. Shoulder screw B
49. Nut
50. Bolt with washer

## 6-2. Tension release mechanism

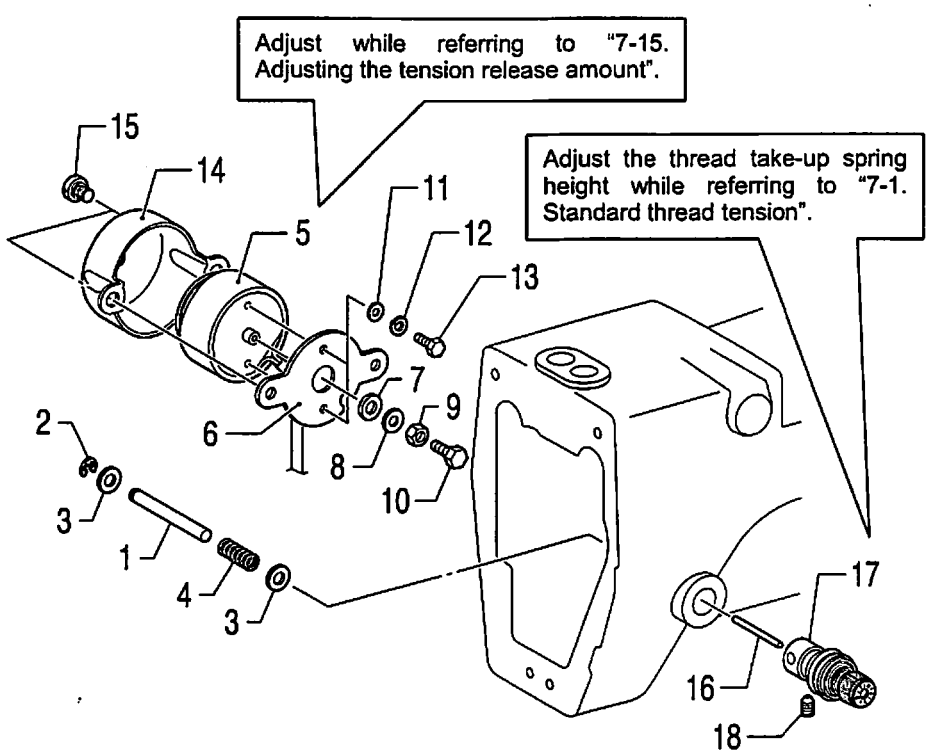


1. Tension release bar
2. Retaining ring, E
3. Plain washers [2 pcs]
4. Spring
5. Tension release solenoid
6. Solenoid setting plate
7. Solenoid cushion
8. Plain washer
9. Nut
10. Bolt
11. Plain washers [2 pcs]
12. Spring washers [2 pcs]
13. Bolts [2 pcs]
14. Solenoid cover
15. Shoulder screws [2 pcs]
16. Tension release pin
17. Tension bracket
18. Set screw

## 6-3. Thread wiper mechanism

Apply grease to the portions indicated by the white arrows.

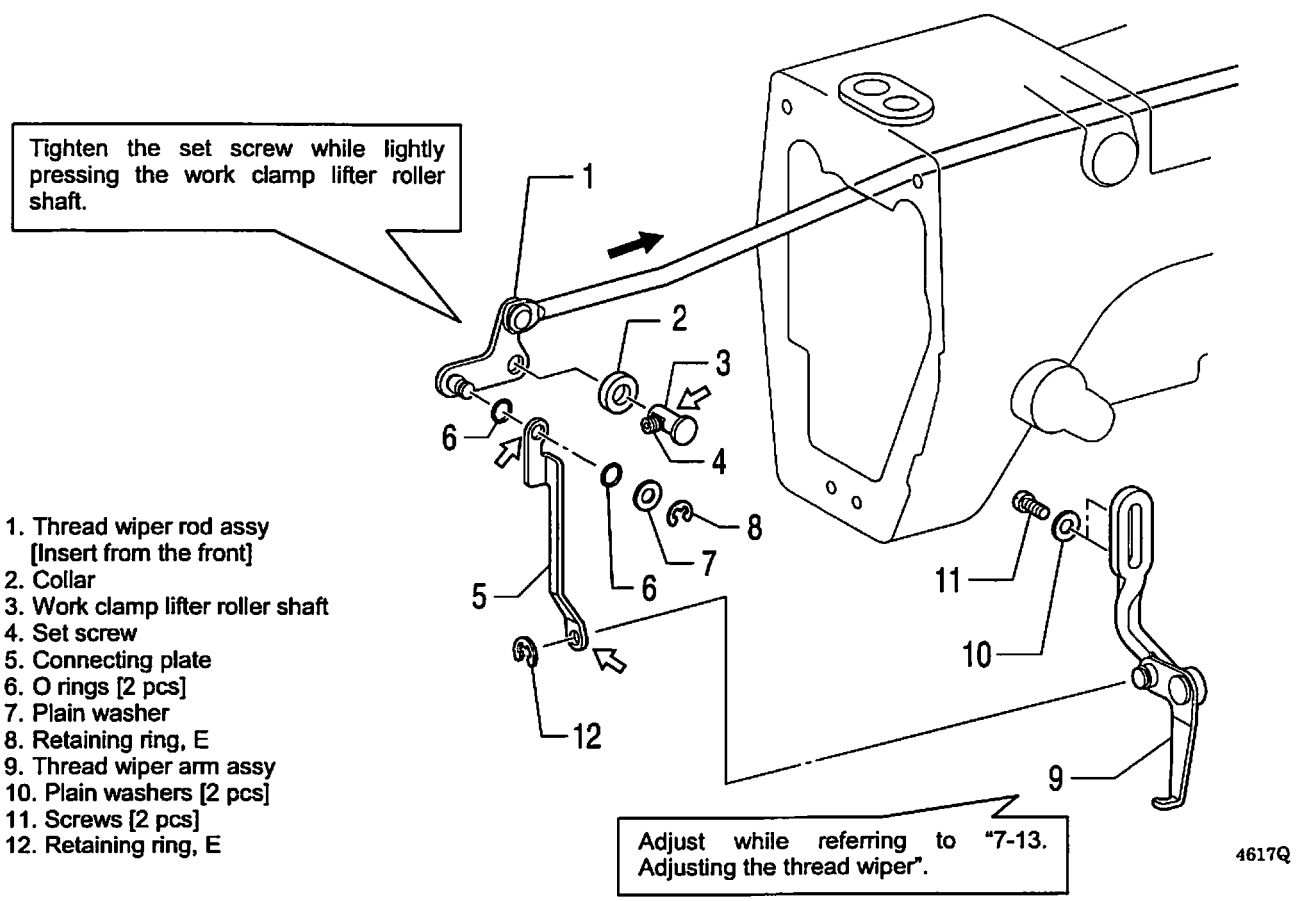


1. Thread wiper rod assy [Insert from the front]
2. Collar
3. Work clamp lifter roller shaft
4. Set screw
5. Connecting plate
6. O rings [2 pcs]
7. Plain washer
8. Retaining ring, E
9. Thread wiper arm assy
10. Plain washers [2 pcs]
11. Screws [2 pcs]
12. Retaining ring, E

## 6-4. Thread nipper mechanism

Apply grease to the portions indicated by the white arrows.

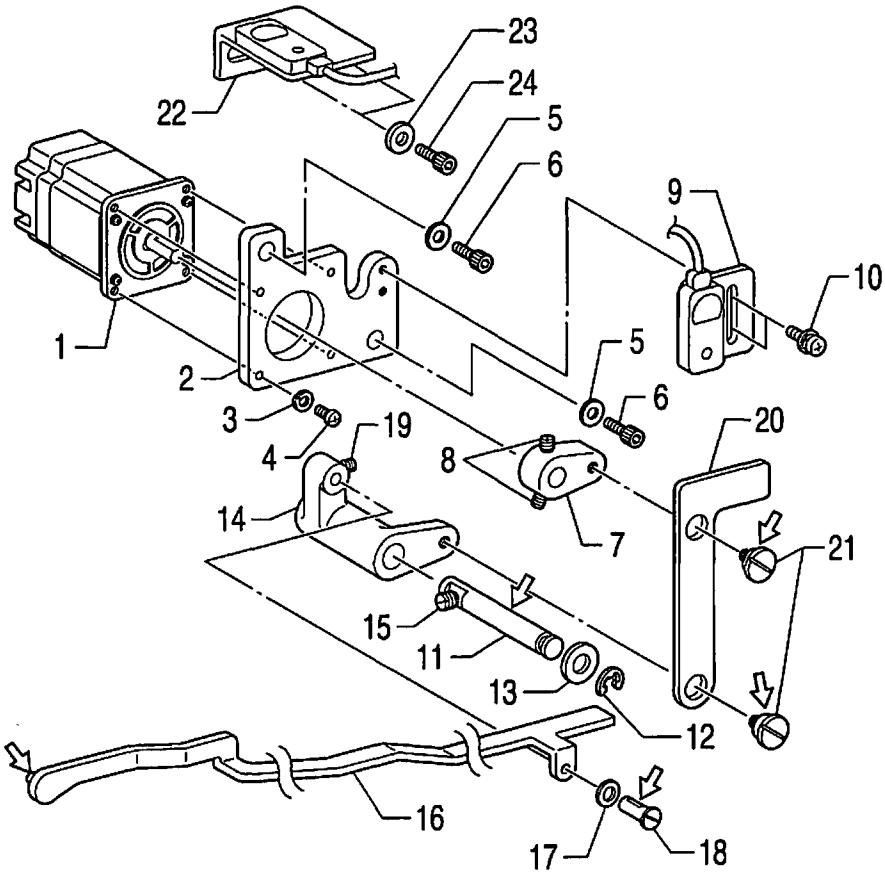


1. Thread nipper pulse motor assy
2. TN-motor setting plate
3. Spring washers [4 pcs]
4. Screws [4 pcs]
5. Plain washers [2 pcs]
6. Bolts [2 pcs]
7. Motor lever
8. Set screws [2 pcs]
9. TN-sensor setting plate F
10. Screws with washers [2 pcs]
11. Thread nipper lever shaft
12. Retaining ring, E
13. Washer
14. Thread nipper lever
15. Set screw
16. Connecting plate F assy
17. Plain washer
18. Lever shaft
19. Set screw
20. Connecting plate B
21. Shoulder screws [2 pcs]
22. TN-sensor setting plate B
23. Plain washers [2 pcs]
24. Bolts [2 pcs]

## 6-5. Work clamp lifter mechanism

Apply grease to the portions indicated by the white arrows.

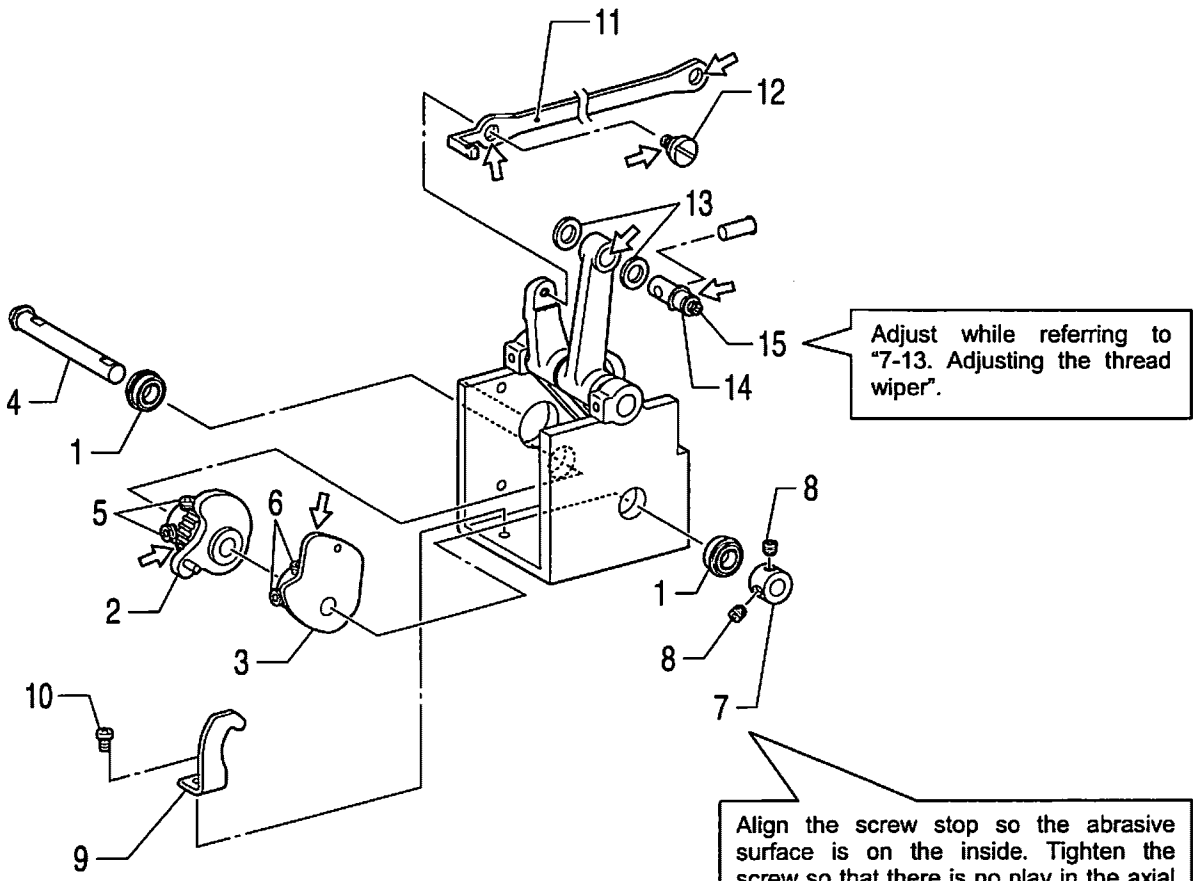


4619Q

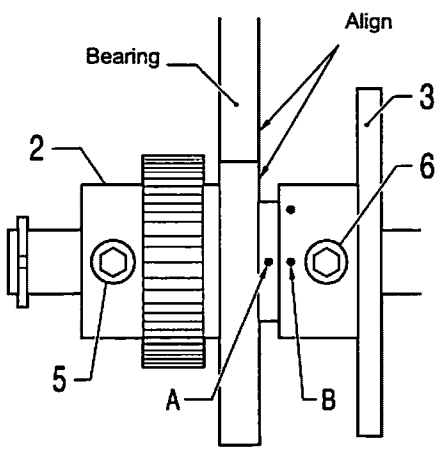


Align the set screw on the index mark A side of the cam gear with the screw stop, and then tighten the set screw so that the sides of the bearing and the cam are flush.
Align the index mark B of the thread wiper cam that is on the same side as the set screw with the index mark A of the cam gear, and then tighten the set screw so that the thread wiper cam is touching the cam gear.

4620Q

1. Ball bearings [2 pcs]
2. Cam gear
3. Thread wiper cam
4. Cam shaft
5. Set screws [2 pcs]
6. Set screws [2 pcs]
7. Set screw collar, B
8. Set screws [2 pcs]
9. Stopper
10. Screw
11. Link [Insert from the back]
12. Link shoulder screws [2 pcs]
13. Plain washers [2 pcs]
14. Thread wiper rod shaft (with retaining ring)
15. Set screw (Temporarily tighten)

KE-430D

4621Q

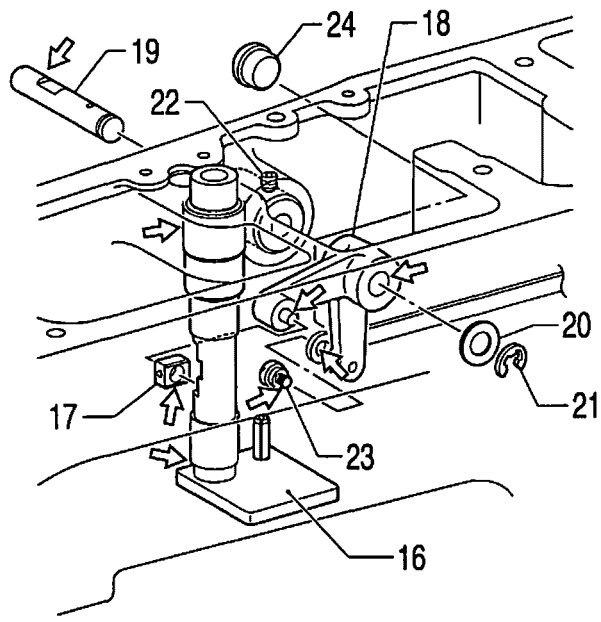


16. Work clamp lifter plate
17. Needle bar guide slide block
18. Lifter lever
19. Lever shaft
20. Plain washer
21. Retaining ring, E
22. Set screw
23. Link shoulder screw
24. Rubber cap

BE-438D

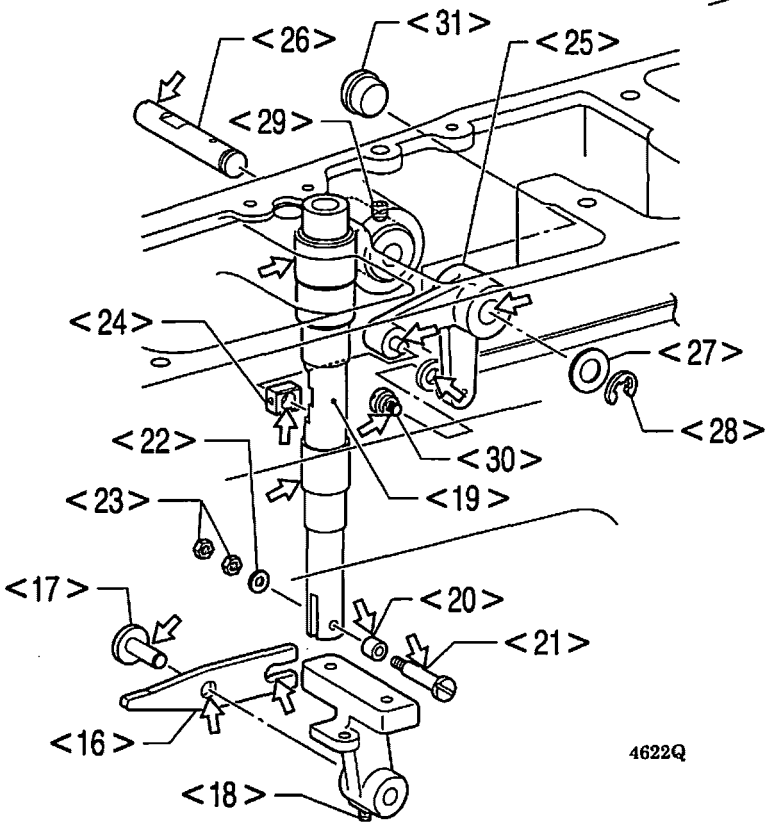


4622Q

<16> Button clamp lever
<17> Button clamp lever shaft
<18> Set screw
<19> Button clamp rod
<20> Roller
<21> Button clamp roller shaft
<22> Plain washer
<23> Nuts [2 pcs]
<24> Needle bar guide slide block
<25> Lifter lever
<26> Lever shaft
<27> Plain washer
<28> Retaining ring, E
<29> Set screw
<30> Link shoulder screw
<31> Rubber cap

Align the set screw with the screw stop and then tighten it so that there is no play in the lifter lever. Check that the lifter lever moves smoothly.

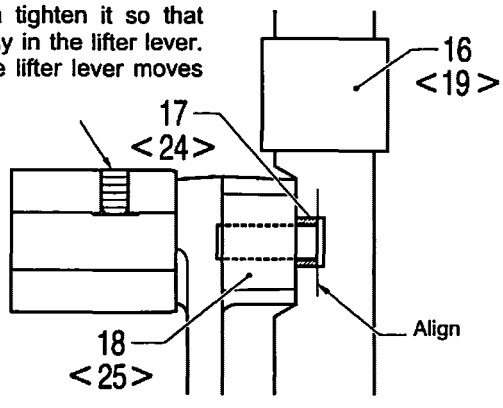


Place the needle bar guide slide block onto the pin of the lifter lever. The pin and the surface of the slide block should be aligned.
While aligning the needle bar guide slide block with the groove in the work clamp lifter plate (button clamp rod), pass the lever shaft through the lifter lever.

**Note:**
When the work clamp lifter plate (button clamp rod) is lowered, the needle bar guide slide block moves away, so hold the work clamp lifter plate (button clamp rod) in place until the link shoulder screw is tightened.

4623Q

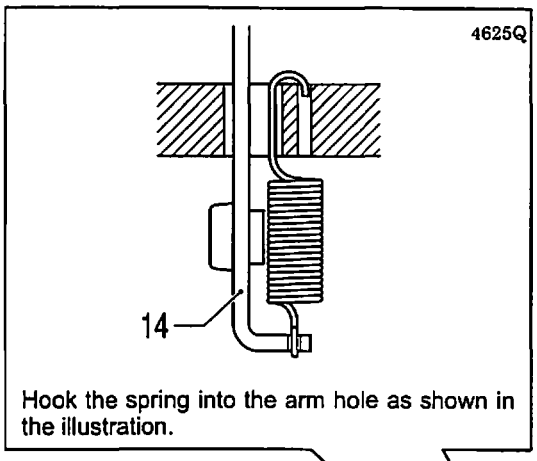


Hook the spring into the arm hole as shown in the illustration.

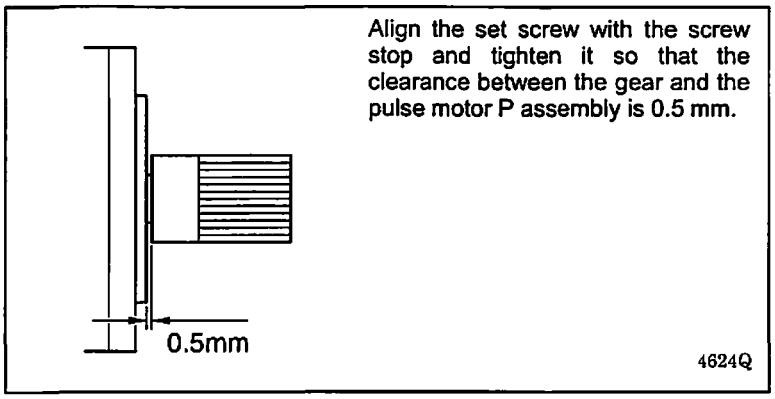


Align the set screw with the screw stop and tighten it so that the clearance between the gear and the pulse motor P assembly is 0.5 mm.

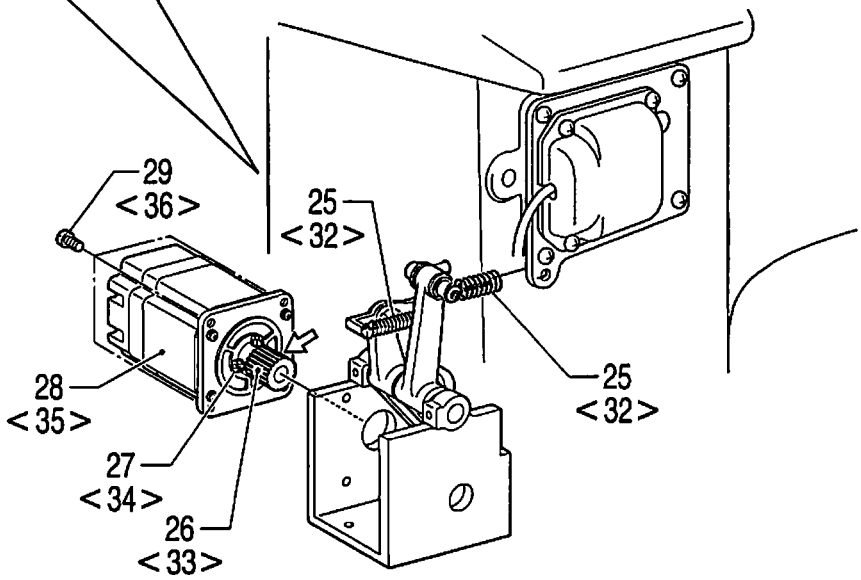


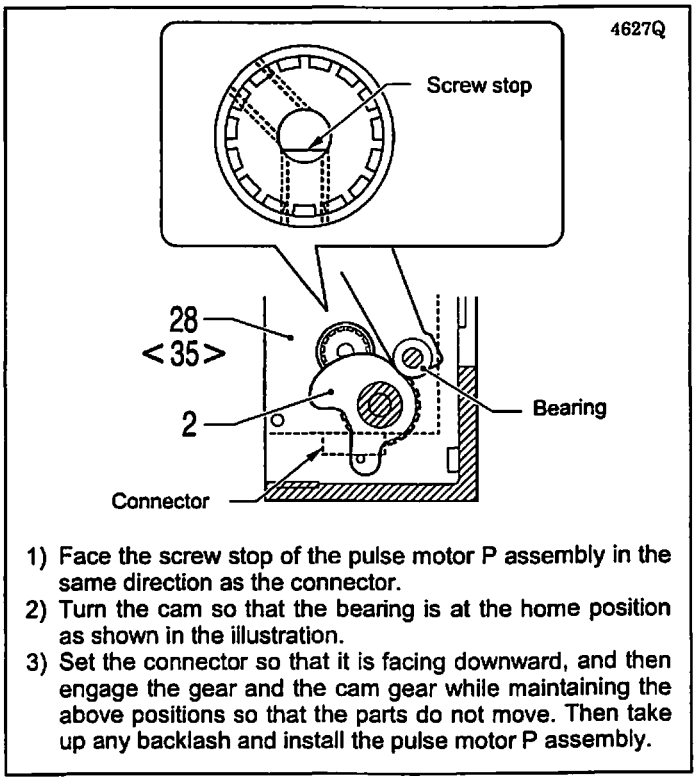


1) Face the screw stop of the pulse motor P assembly in the same direction as the connector.
2) Turn the cam so that the bearing is at the home position as shown in the illustration.
3) Set the connector so that it is facing downward, and then engage the gear and the cam gear while maintaining the above positions so that the parts do not move. Then take up any backlash and install the pulse motor P assembly.

**KE-430D**

25. Spring [2 pcs]
26. Gear
27. Set screws [2 pcs]
28. Pulse motor P assy
29. Bolts [4 pcs]

**BE-438D**

<32> Spring [2 pcs]
<33> Gear
<34> Set screws [2 pcs]
<35> Pulse motor P assy
<36> Bolts [4 pcs]

## 6-6. Feed mechanism

Apply grease to the portions indicated by the white arrows.

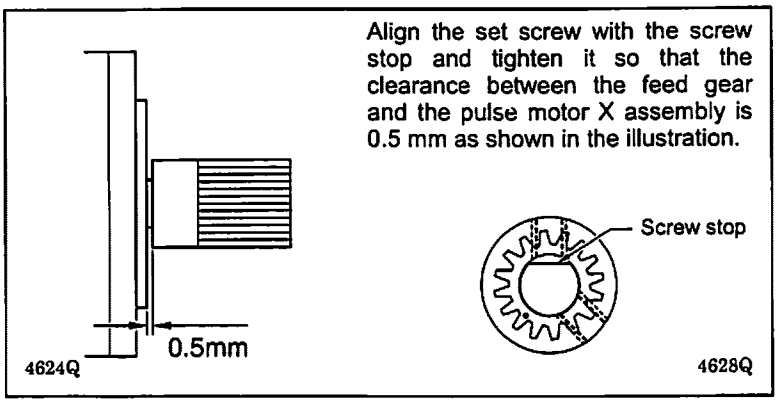


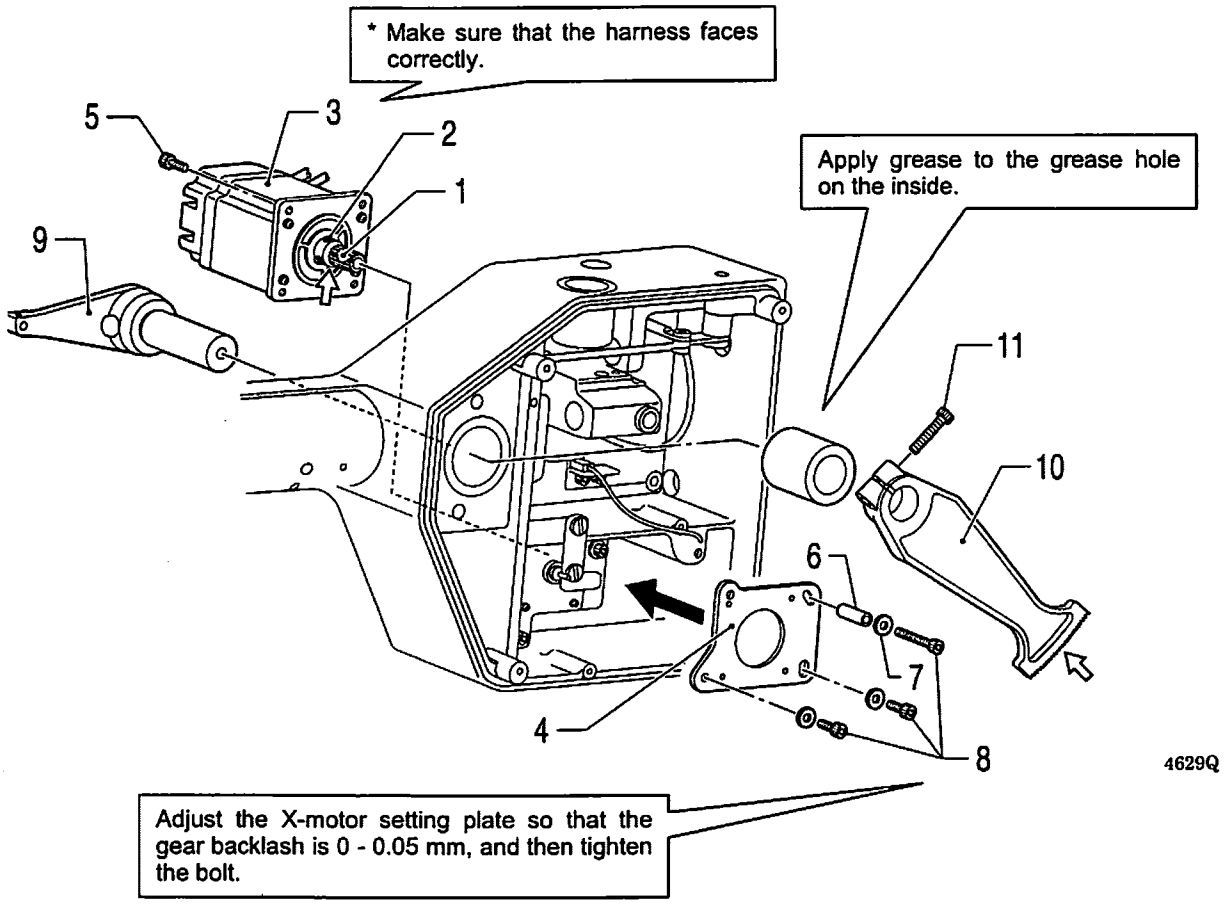


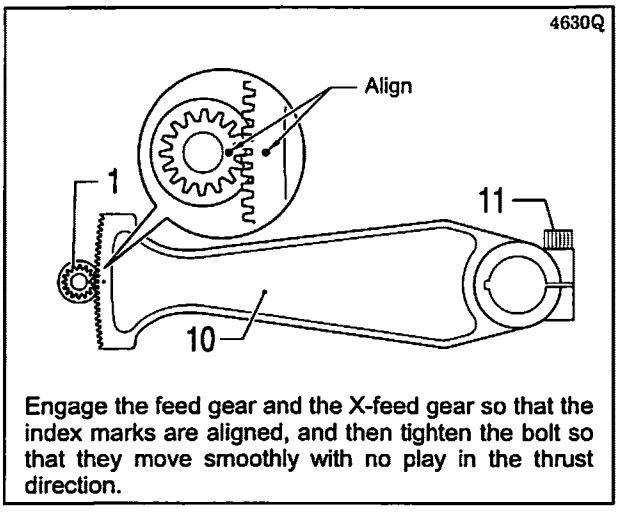


1. Feed gear
2. Set screws [2 pcs]
3. Pulse motor X assy [Insert from above the machine]
4. X-motor setting plate
5. Bolts [4 pcs]
6. Collar
7. Plain washers [3 pcs]
8. Bolts [3 pcs]
9. X-feed lever
10. X-feed gear
11. Bolt

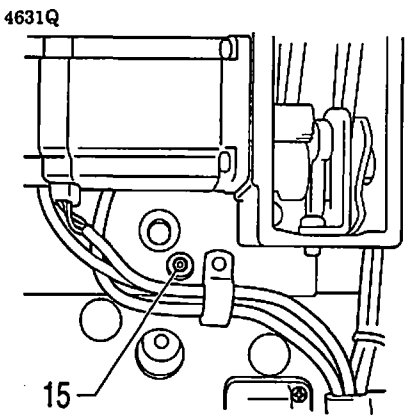


1) Loosen the set screw by about 1/3 of a turn from the tightened position so that the eccentric shaft can turn.
2) Insert the Y-feed rack shaft, turn the eccentric shaft so that the Y-feed rack shaft slightly touches the ball bearing, and then tighten the set screw.

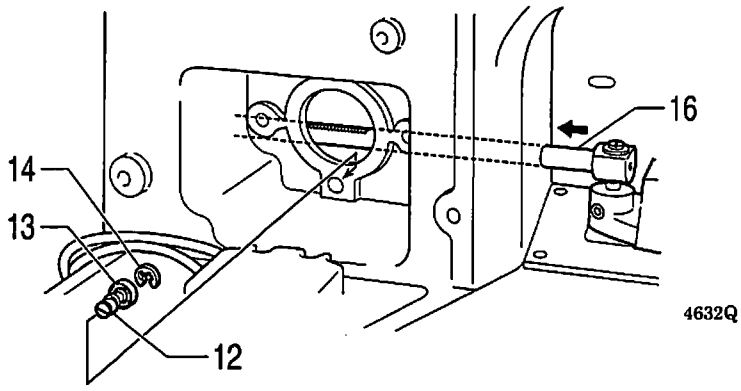


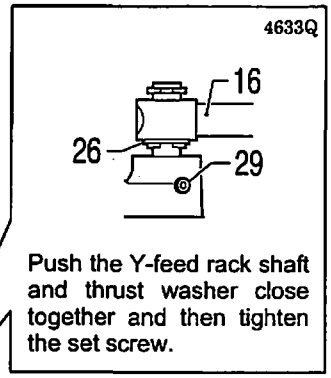


Push the Y-feed rack shaft and thrust washer close together and then tighten the set screw.

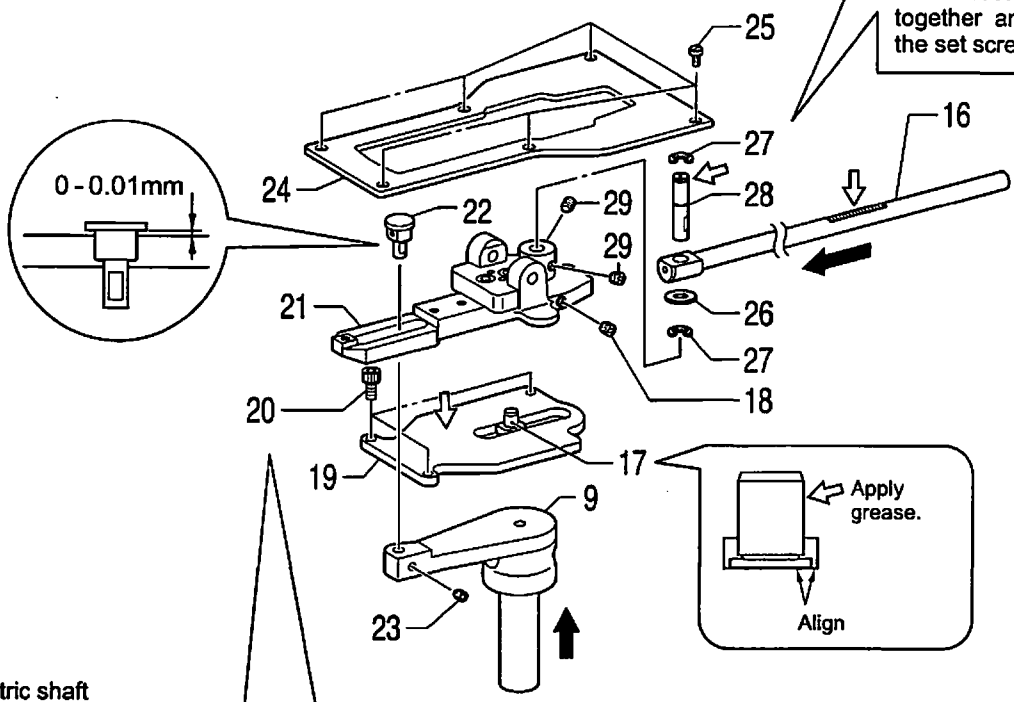


12. Eccentric shaft
13. Ball bearing
14. Retaining ring
15. Set screw (Temporarily tighten)
16. Y-feed rack shaft
17. Regulator block assy
18. Set screw
19. Feed bracket support plate
20. Bolts [3 pcs] (Temporarily tighten)
21. Feed bracket sub assy
22. Regulator block assy
23. Set screw
24. Feed bracket cover
25. Screws [6 pcs]
26. Thrust washer
27. Retaining rings [2 pcs]
28. Y-connecting pin
29. Set screws [2 pcs]

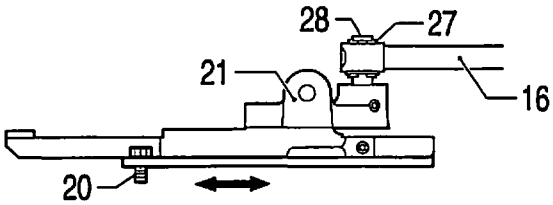


1) Connect the Y-feed rack shaft and the feed bracket sub assembly with the Y-connecting pin with the retaining ring at the top.
2) Move the feed bracket sub assembly back and forth so that the Y-connecting pin moves smoothly into the holes of the Y-feed rack shaft and the feed bracket sub assembly, and then tighten the bolt.
3) Temporarily remove the Y-connecting pin.

4635Q

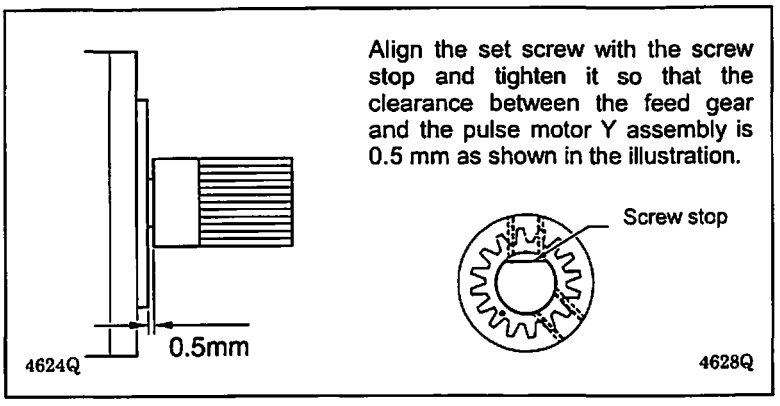


Align the set screw with the screw stop and tighten it so that the clearance between the feed gear and the pulse motor Y assembly is 0.5 mm as shown in the illustration.

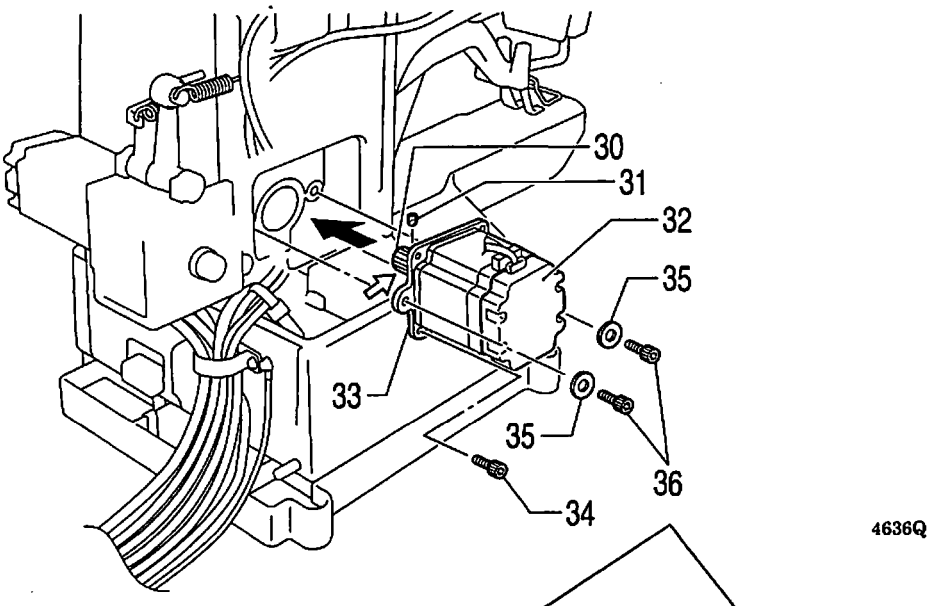


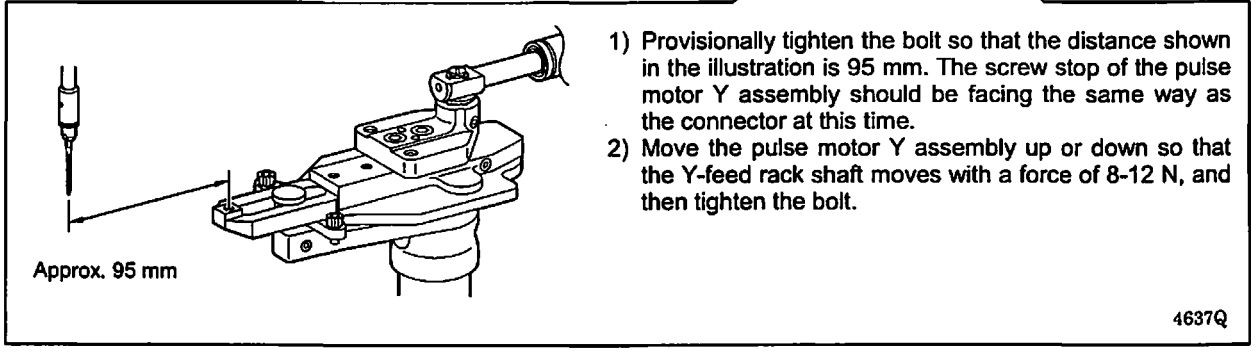


1) Provisionally tighten the bolt so that the distance shown in the illustration is 95 mm. The screw stop of the pulse motor Y assembly should be facing the same way as the connector at this time.
2) Move the pulse motor Y assembly up or down so that the Y-feed rack shaft moves with a force of 8-12 N, and then tighten the bolt.

30. Feed gear
31. Set screws [2 pcs]
32. Pulse motor Y assy
33. Y-motor setting plate
34. Bolts [4 pcs]
35. Plain washers [2 pcs]
36. Bolts [2 pcs] (Temporarily tighten)

After installing, carry out the steps in "Feed mechanism home position adjustment" on the following page.

**<Feed mechanism home position adjustment>**

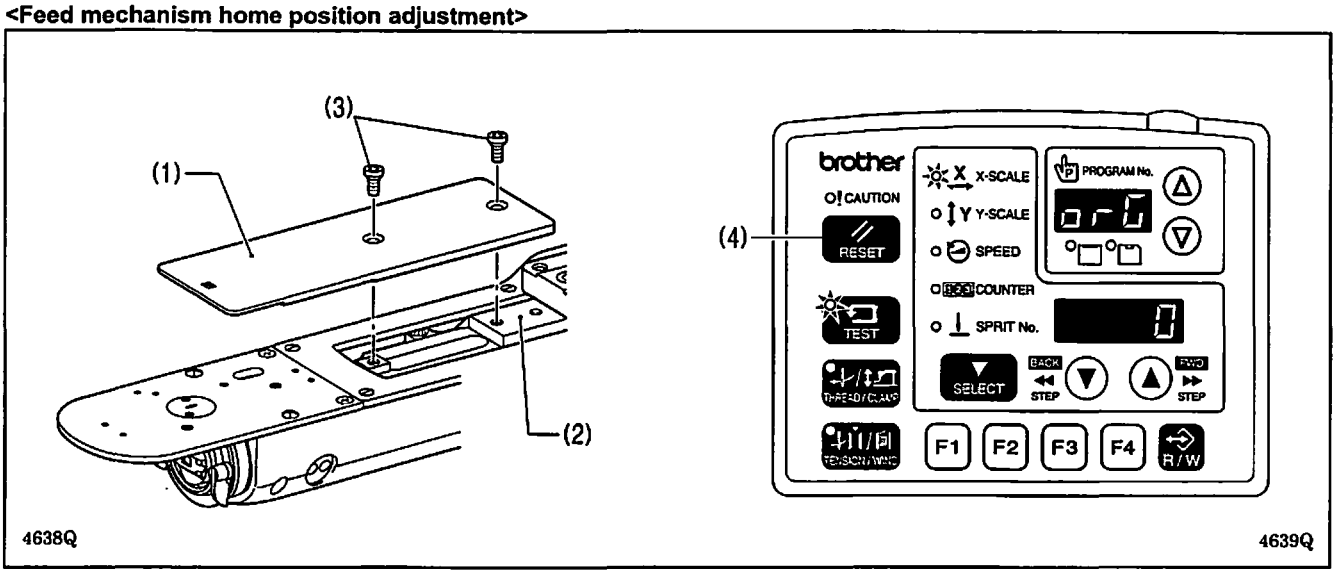


1. Install the home position standard plate (1) to the feed bracket sub assembly (2) with the two screws (3).
2. Gently tilt back the machine head.
3. Switch the sewing machine to home position adjustment mode. (See "7-17. Adjusting the home position".)
4. Press and hold the RESET key (4) for 2 seconds or more.
   * The offset value will be cleared and reset to " 0".

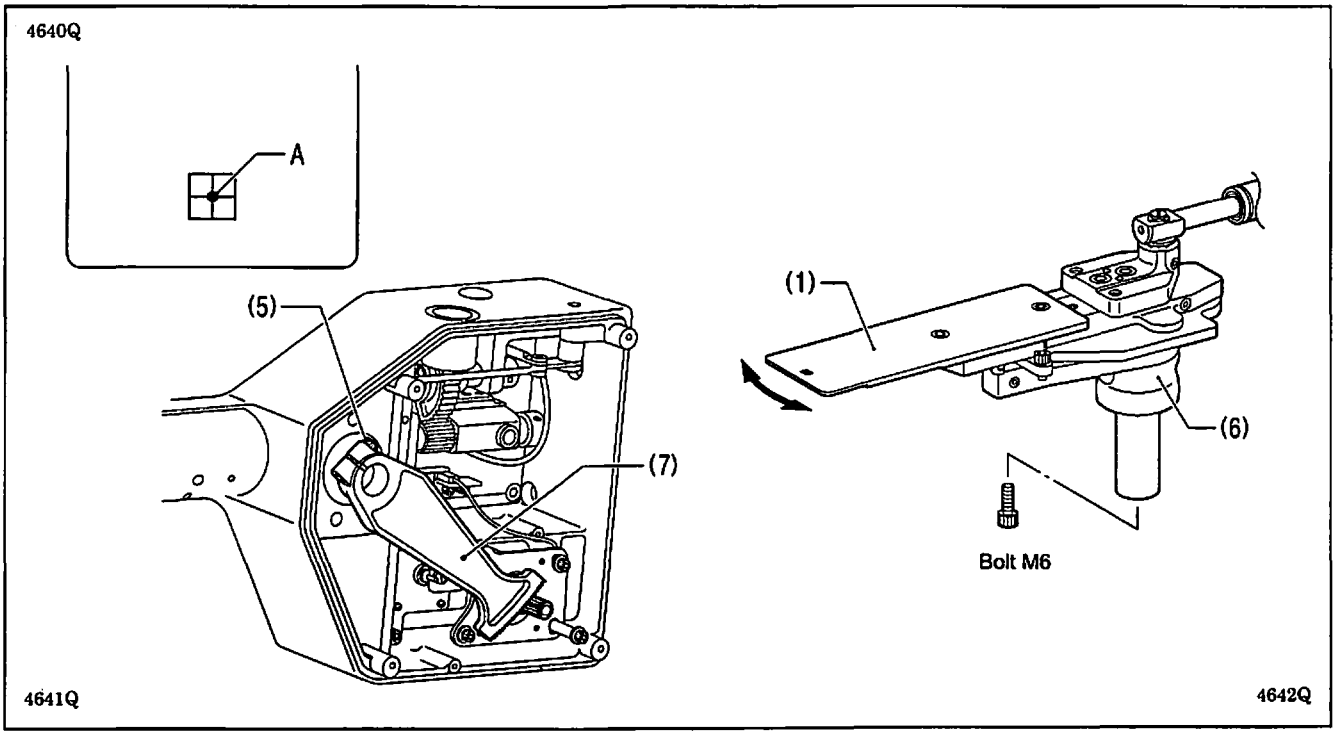


5. Turn the pulley by hand and check at what point the needle drops to the home position standard plate. If the needle does not drop to point (A), carry out the following adjustments.

   **Note:**
   Be careful not to let the needle touch the home position standard plate.
6. Loosen the bolt (5) and move the home position standard plate (1) to the left or right to adjust the point where the needle drops at the home position.
   * If play occurs in the thrust direction, tighten the M6 bolt on the X-feed lever (6), and adjust while pulling the bolt.
7. Tighten the bolt (5).
8. Turn off the power switch and check that there is no play in the thrust direction in the X-feed gear (7).
9. Make fine adjustments while referring to "7-17-1. Adjusting the X-Y feed home position".

## 6-7. Upper shaft mechanism

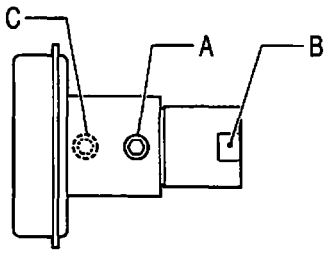


Tighten the set screw so that the screw stop A on the motor shaft is in the same phase as the screw stop B on the thread trimmer cam.
Tighten the set screw so that the screw stop C on the upper shaft is at a phase of approximately 180 degrees from the screw stop A on the motor shaft.

4644Q

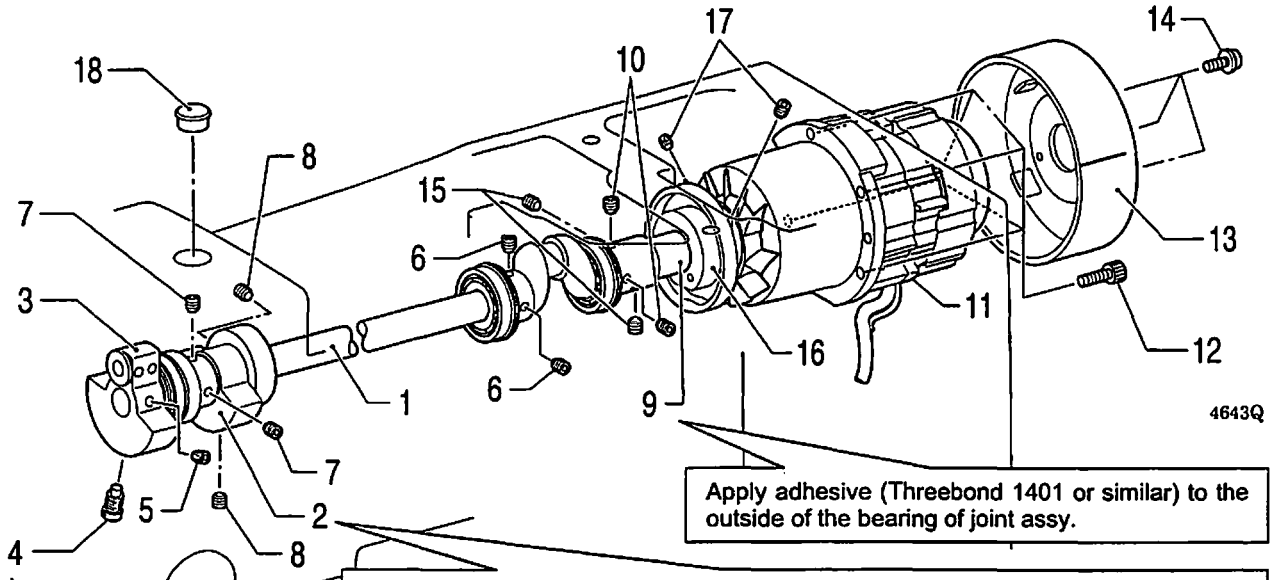


4643Q

Apply adhesive (Threebond 1401 or similar) to the outside of the bearing of joint assy.

Install the bobbin winder driving wheel so that it is in phase with the thread take-up crank as shown in the illustration and aligned with the reference line on the upper shaft.

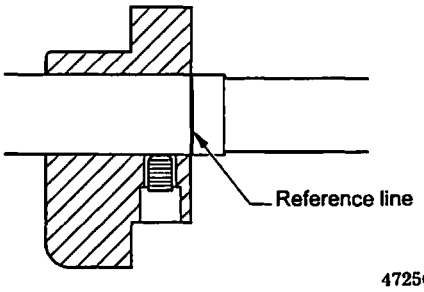


4725Q

1) Tighten the screw of the thread take-up crank so that it is aligned with the upper shaft hole.
2) While pressing the thread take-up crank so that there is no play in it, tighten the two set screws (6).

Apply adhesive (Threebond 1401 or similar) to the thread section of the screw.

1) Align the index mark D on the thread trimmer cam and the index mark E on the joint assembly, and then provisionally tighten the set screw at the index mark side.
2) After tightening the set screw at the screw stop side, fully tighten the set screw at the index mark side.
3) Carry out the adjustments in "7-14. Adjusting the thread trimmer cam position".

Apply the specified grease (GREASE BZL-301) to the grooves.

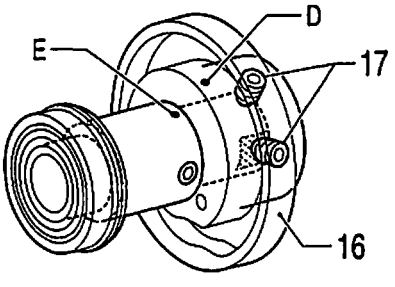


4706Q

1. Upper shaft
2. Bobbin winder driving wheel
3. Thread take-up crank
4. Screw
5. Set screws [2 pcs]
6. Set screws [2 pcs]
7. Set screws [2 pcs]
8. Set screws [2 pcs]
9. Joint assy
10. Set screws [2 pcs]
11. Motor assy
12. Bolts [4 pcs]
13. Pulley
14. Screws with washers [3 pcs: Loosen]
15. Set screws [2 pcs]
16. Thread trimmer cam
17. Set screws [2 pcs]
18. Rubber cap

## 6-8. Needle bar mechanism

Apply grease <GREASE BZL-301> specified by Brother to the portions indicated by the white arrows.

4645Q

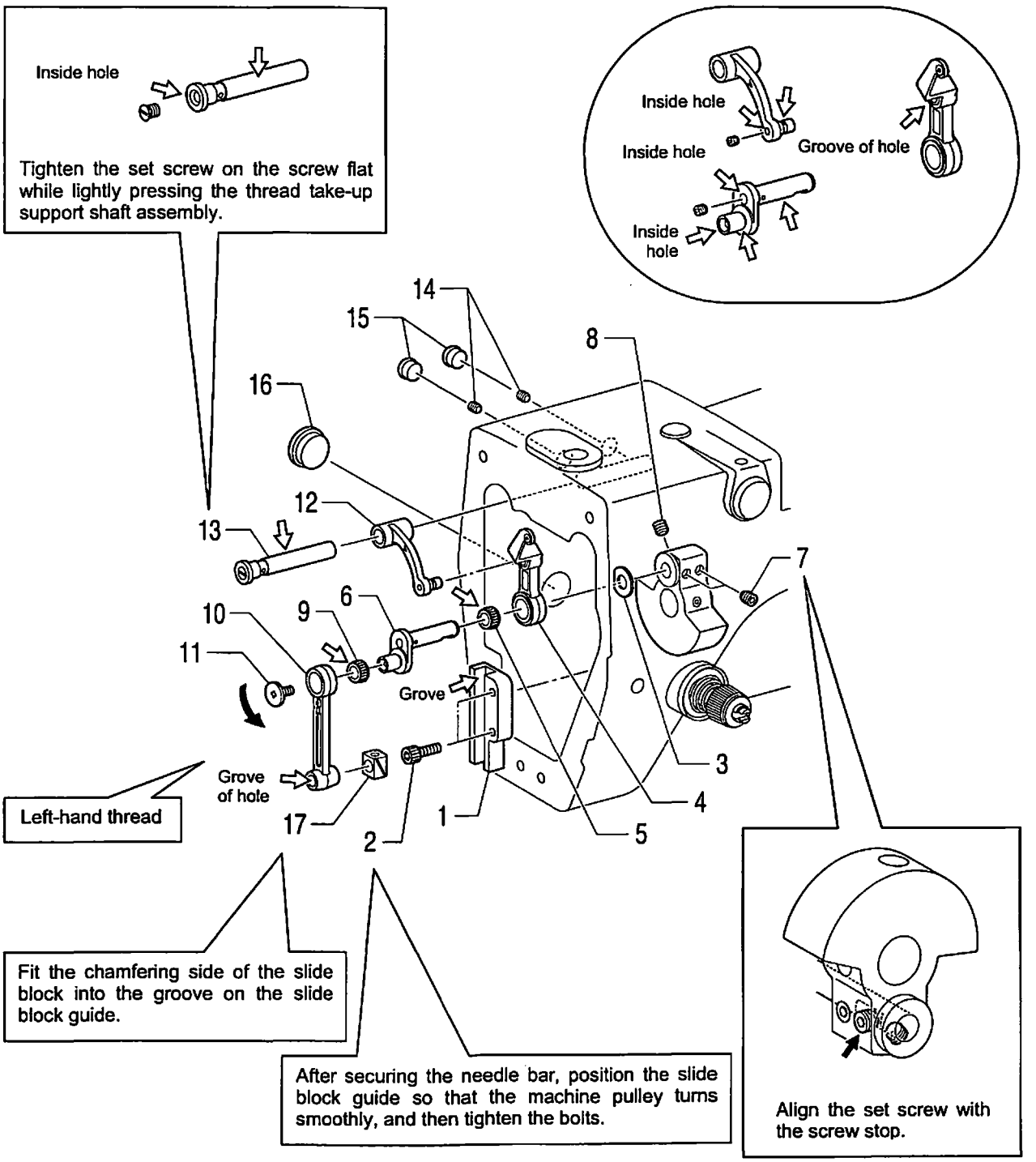


1. Slide block guide
2. Bolts [2 pcs] (Temporarily tighten)
3. Washer
4. Thread take-up lever assy
5. Needle bearing
6. Needle bar crank
7. Set screws [2 pcs]
8. Set screw
9. Needle bearing
10. Needle bearing
11. Screw
12. Thread take-up support
13. Thread take-up support shaft assy
14. Set screws [2 pcs]
15. Rubber caps [2 pcs]
16. Rubber cap
17. Slide block

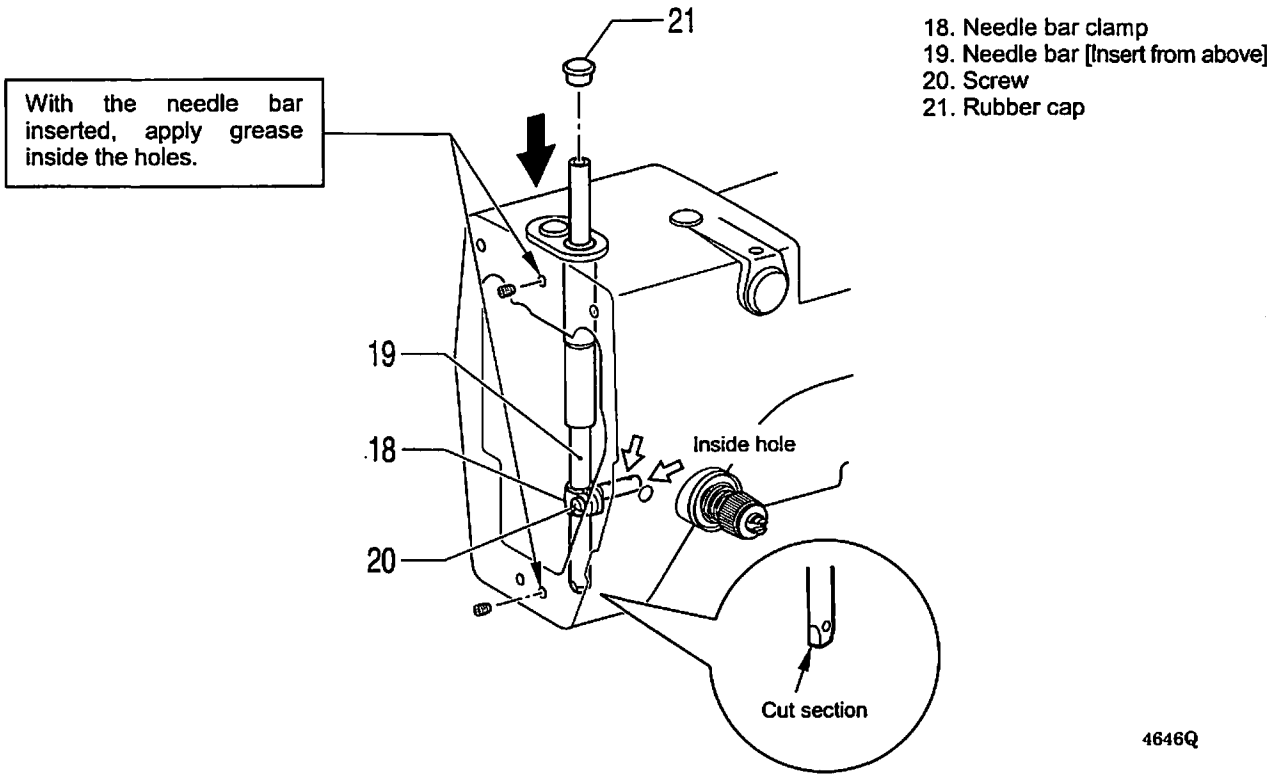


18. Needle bar clamp
19. Needle bar [Insert from above]
20. Screw
21. Rubber cap

Align the needle bar so that reference line A (the second lowest reference line on the needle bar) or reference line a (top reference line) is aligned with the lower edge of the needle bar bush when the machine pulley is turned to raise the needle bar from its lowest position, and then set the cut section so that it is facing forward and tighten the screw.

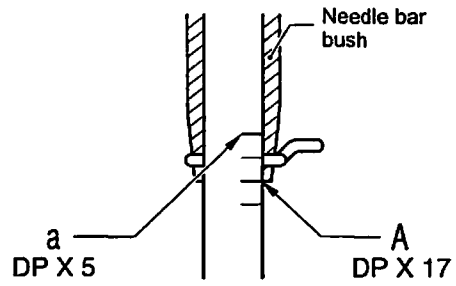


4647Q

## 6-9. Lower shaft mechanism

Apply grease <GREASE BZL-301> or <GREASE BZL-302> specified by Brother to the portions indicated by the white arrows.

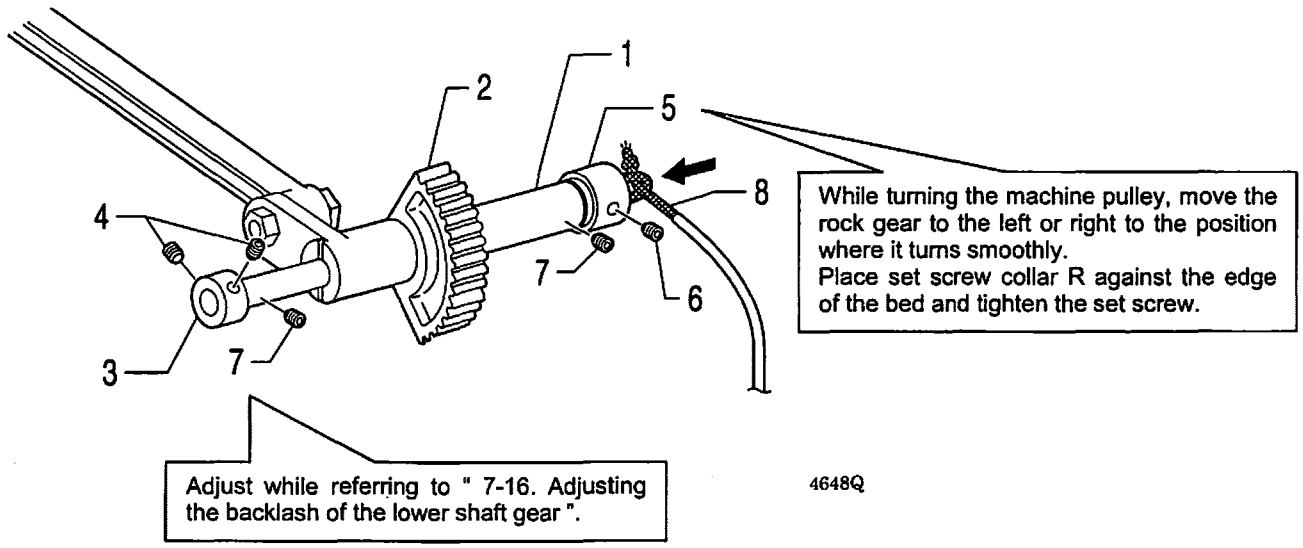


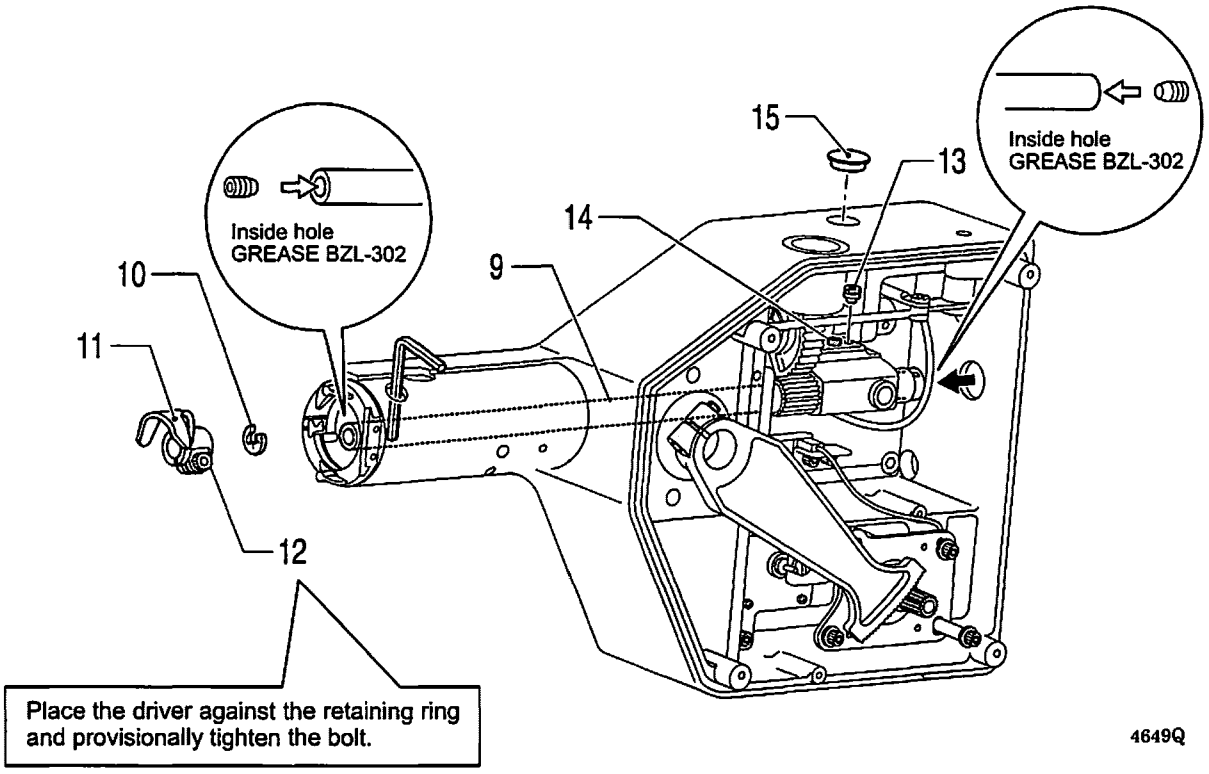


1. Rock gear shaft [Insert from the rear of the machine head]
2. Rock gear
3. Set screw collar, B
4. Set screws [2 pcs]
5. Set screw collar, R
6. Set screw (Temporarily tighten)
7. Set screws [2 pcs] (Temporarily tighten)
8. Wick
9. Lower shaft assy [Insert from the rear of the machine head]
10. Retaining ring, E
11. Driver
12. Bolt (Temporarily tighten)
13. Adjusting stud
14. Set screw
15. Oil cap

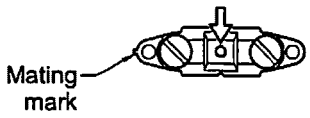


Insert the crank rod (lower part) into the crank of the upper shaft, and then align the mating mark on the crank rod (upper part) from above and gently tighten the bolts.
* Check that the machine pulley turns smoothly.

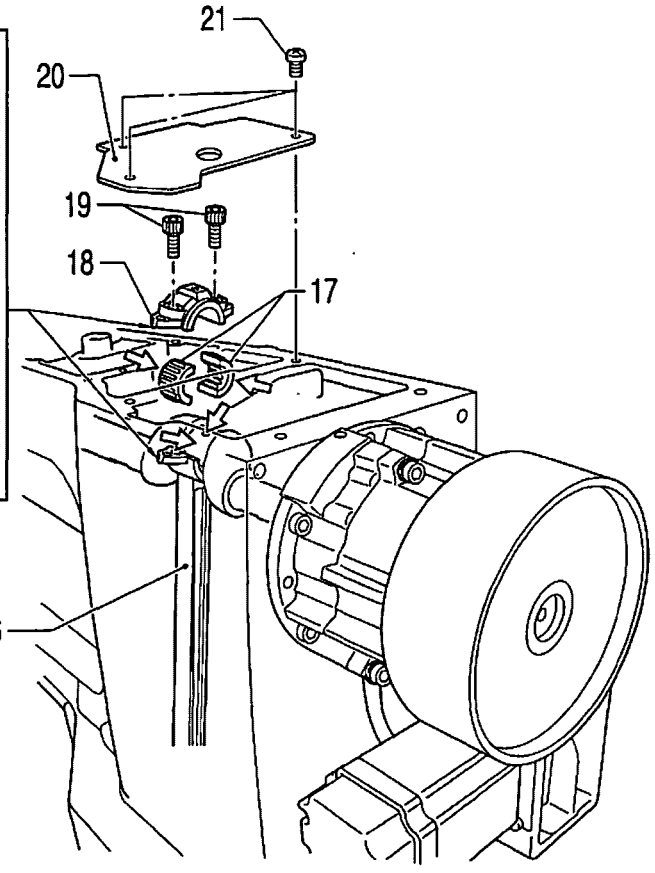


4650Q

16. Crank rod (Lower part) [Insert into upper shaft crank]
17. Needle bearing
18. Crank rod (Upper part) [Align the mating mark]
19. Bolts [2 pcs]
20. Crank cover
21. Screws [3 pcs]

## 6-10. Shuttle hook mechanism

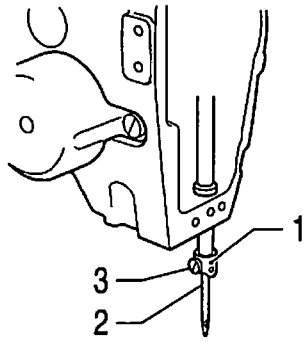


4651Q

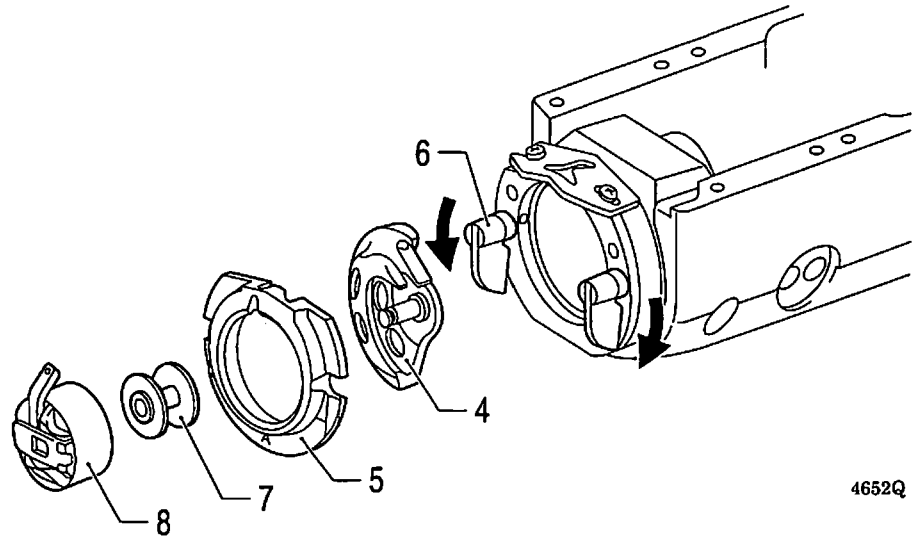


4652Q

1. Needle bar thread guide
2. Needle
3. Set screw
4. Shuttle hook
5. Shuttle race base
6. Shuttle race base setting claw [Close]
7. Bobbin
8. Bobbin case

After installing the shuttle hook, carry out the adjustments in "7-3. Adjusting the needle bar lift amount", "7-4. Adjusting the driver needle guard" and "7-5. Adjusting the needle clearance".

## 6-11. Thread trimmer mechanism (2)

Apply grease to the portions indicated by the white arrows.

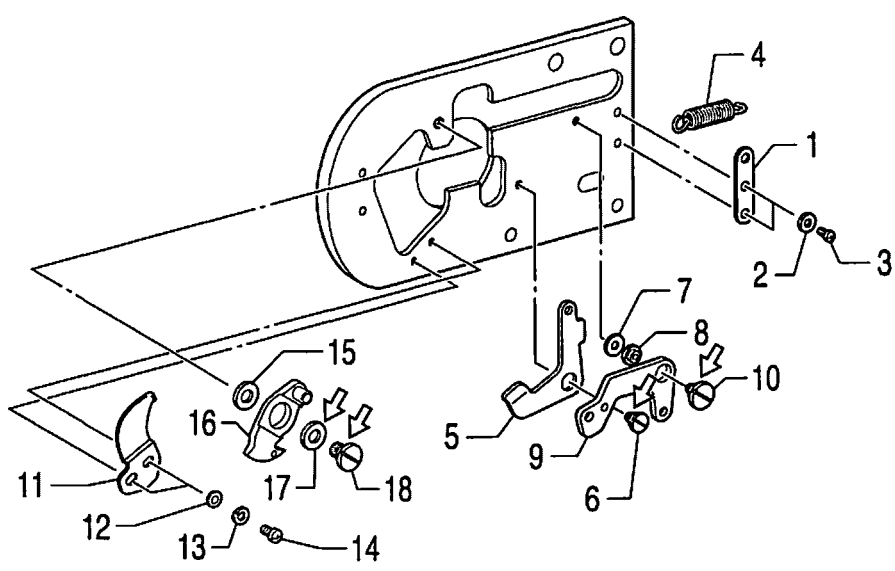


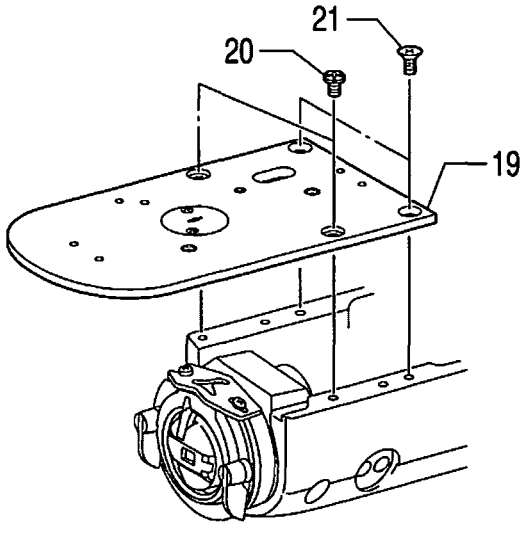


1) Insert the pin of the movable knife assembly into the hole in the movable knife connecting plate, insert the pin of the thread nipper connecting plate into the hole in the thread nipper D assembly, and then install the needle plate with the screws and flat screws so that the needle drops into the center of the needle hole.
2) Check through the slot in the needle plate that the thread nipper D assembly is on the pin.

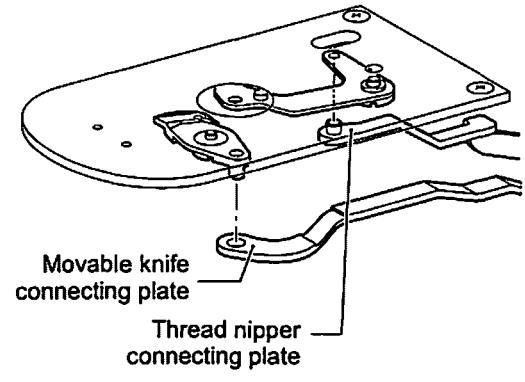


1. Spring hook plate
2. Plain washers [2 pcs]
3. Screws [2 pcs]
4. Spring
5. Thread nipper U
6. Shoulder screw
7. Spacer
8. Collar
9. Thread nipper D assy
10. Shoulder screw
11. Fixed knife
12. Plain washers [2 pcs]
13. Spring washers [2 pcs: except KE-430D denim spec.]
14. Screws [2 pcs]
15. Movable knife spacer
16. Movable knife assy
17. Movable knife collar
18. Movable knife shoulder screw
19. Needle plate
20. Screws [2 pcs]
21. Flat screws [2 pcs]

## 6-12. Work clamp arm mechanism (KE-430D)

Be careful not to drop these seven ball bearings when installing the work clamp arm assembly.

Push the work clamp arm lever plate in the direction of the arrow to raise the work clamp by about 5 mm, and then press the bearing ball gently against the underside of the work clamp arm support plate and secure the support shaft with the set screw.

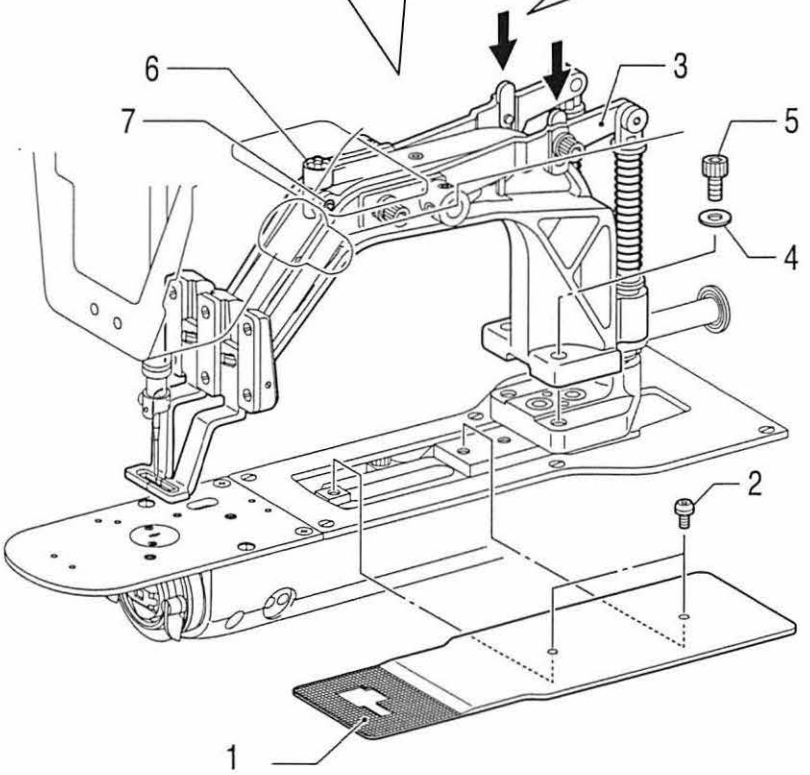


1. Feed plate
2. Screws [2 pcs]
3. Work clamp arm assy
4. Plain washers [2 paces]
5. Bolts [2 pcs]
6. Support shaft
7. Set screw

4656Q

After installing, carry out test feeding and check that the needle hole is inside the work clamp and the feed plate frame. If the needle hole is not inside the frame, adjust the position of the work clamp arm assembly and feed plate.

**Apply grease to all sliding parts during assembly.**

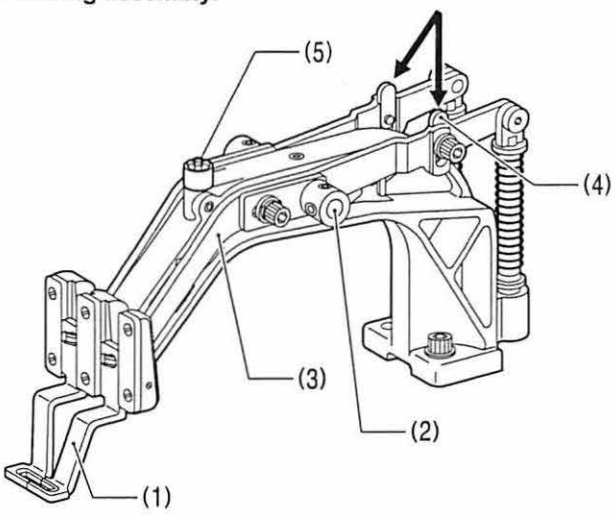


1) Sliding portion of the work clamp (1) (Apply small amount of grease.)
2) Sliding portion of the work clamp arm lever shaft (2) and the work clamp arm levers R and L (3)
3) Round portion of the work clamp arm lever plate (4)
4) Bearing ball of the work clamp arm support shaft (5)

4657Q

## 6-13. Work clamp arm mechanism (BE-438D)

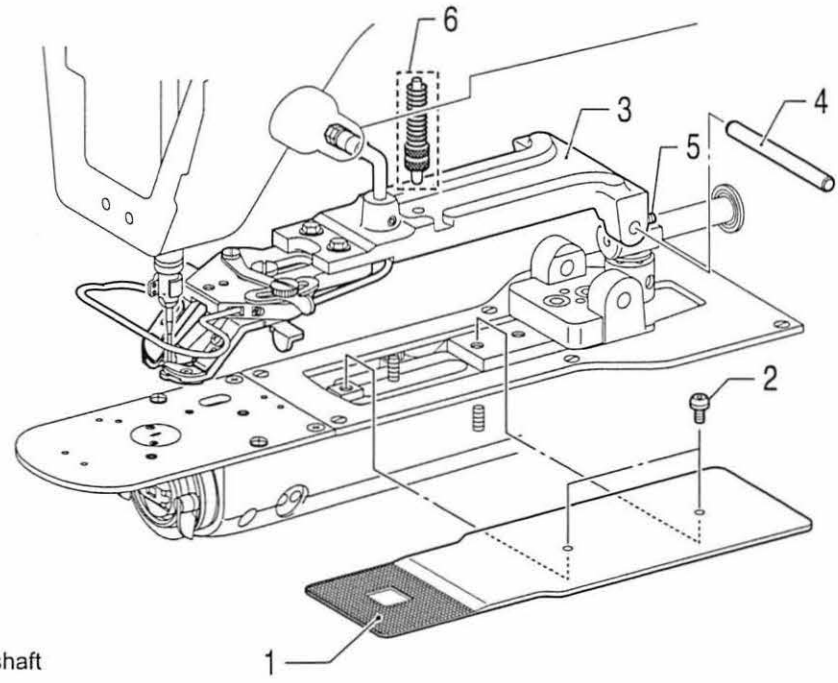


1. Feed plate
2. Screws [2 pcs]
3. Button clamp holder
4. Button clamp holder shaft
5. Set screws [2 pcs]
6. Nuts [2 pcs]
   Adjusting screw
   Compression spring

4658Q

After installing, check that the needle passes into the button hole without touching the button. (Refer to "7-12. Adjusting the position of the button holder".)

**Apply grease to the portions indicated by the arrows during assembly.**

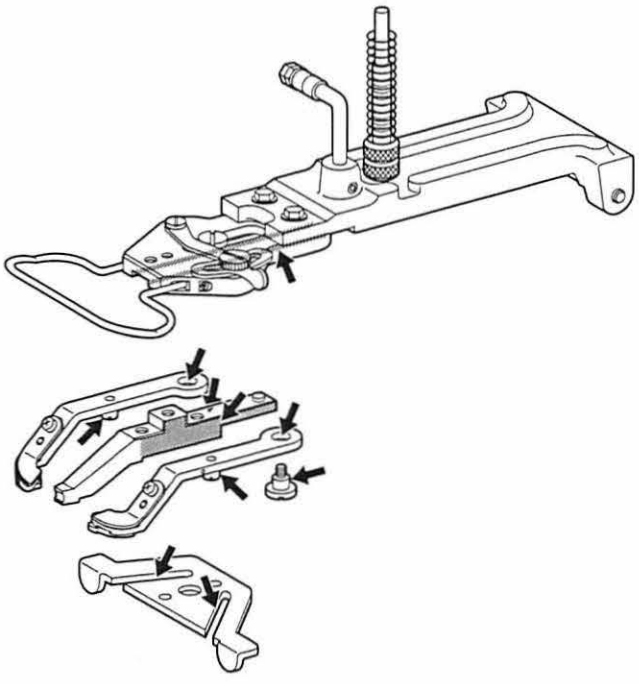

4659Q

## 6-14. Covers

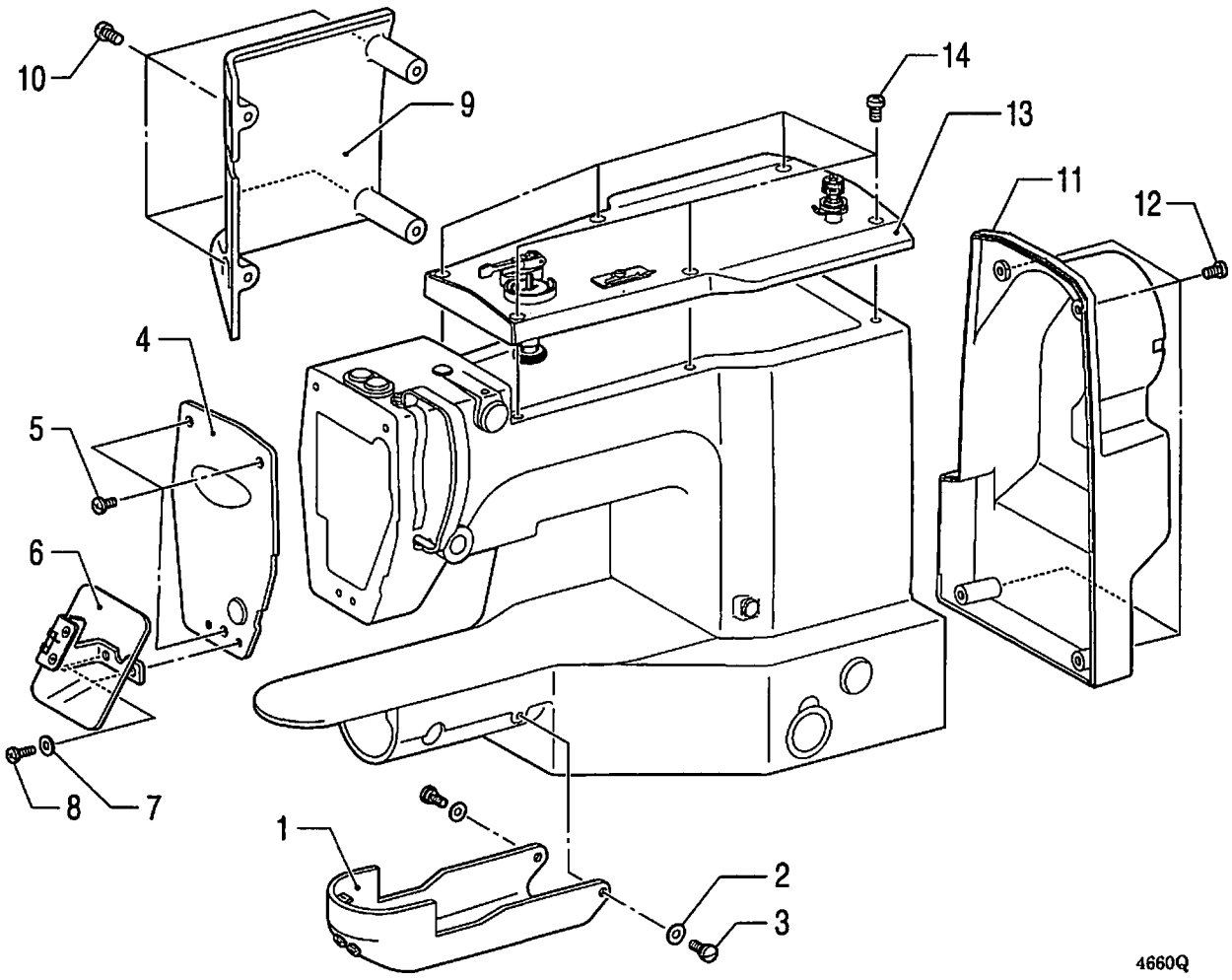


1. Shuttle race cover assy
2. Spring washers [2 pcs]
3. Screws [2 pcs]
4. Face plate assy
5. Screws [3 pcs]
6. Eye guard assy
7. Plain washers [2 pcs]
8. Screws [2 pcs]
9. Frame side cover
10. Screws [4 pcs]
11. Back cover
12. Screws [4 pcs]
13. Top cover
14. Screws [6 pcs]

# 7. ADJUSTMENT

## ⚠ CAUTION

- Maintenance and inspection of the sewing machine should only be carried out by a qualified technician.
- Ask your Brother dealer or a qualified electrician to carry out any maintenance and inspection of the electrical system.
- Turn off the power switch and disconnect the power cord from the wall outlet at the following times, otherwise the machine may operate if the foot switch is depressed by mistake, which could result in injury.
  - When carrying out inspection, adjustment and maintenance
  - When replacing consumable parts such as the rotary hook
- Hold the machine head with both hands when tilting it back or returning it to its original position. Furthermore, after tilting back the machine head, do not push the face plate side or the pulley side from above, as this could cause the machine head to topple over, which may result in personal injury or damage to the machine.
- If the power switch needs to be left on when carrying out some adjustment, be extremely careful to observe all safety precautions.
- If any safety devices have been removed, be absolutely sure to re-install them to their original positions and check that they operate correctly before using the machine.

## 7-1. Standard thread tension

| Use | KE-430D | | | BE-438D |
|---|---|---|---|---|
| | Ordinary materials (-01) | Foundation garments (-07) | Denim (-02) | |
| Upper thread | #50 or equivalent | #60 or equivalent | #30 or equivalent | #60 or equivalent |
| Lower thread | #60 or equivalent | #80 or equivalent | #50 or equivalent | #60 or equivalent |
| Upper thread tension (N) | 0.8 - 1.2 | | 1.6 - 2.0 | 1.0 - 1.8 |
| Lower thread tension (N) | 0.2 - 0.3 | | | 0.2 - 0.4 |
| Thread take-up spring height (mm) | 6 - 8 | | | 7 - 9 |
| Thread take-up spring tension (N) | 0.2 - 0.4 | | 0.6 - 1.0 | 0.15 - 0.35 |
| Pre-tension (N) | 0.05 - 0.3 | | | 0.1 - 0.4 |
| Needle | DP x 5 #14 | DP x 5 #9 | DP x 17NY #19 | DP x 17NY #12 |

### 7-1-1. Upper and lower thread tension

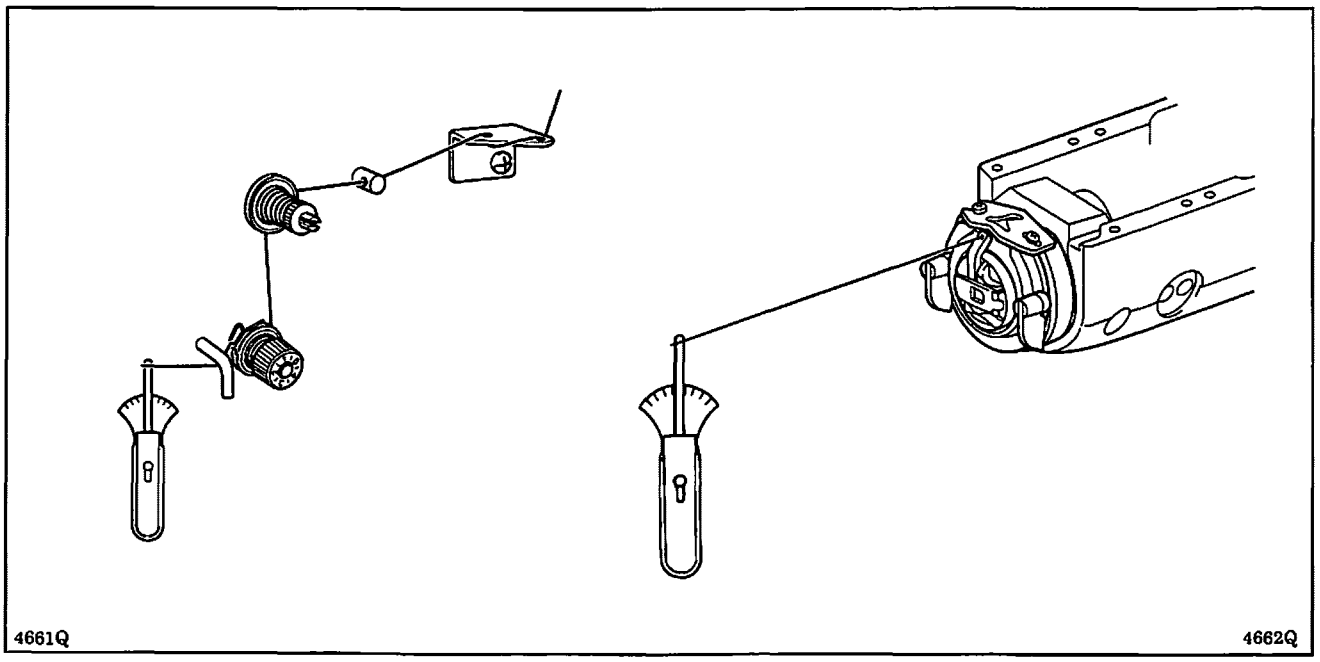

## 7-1-2. Thread take-up spring

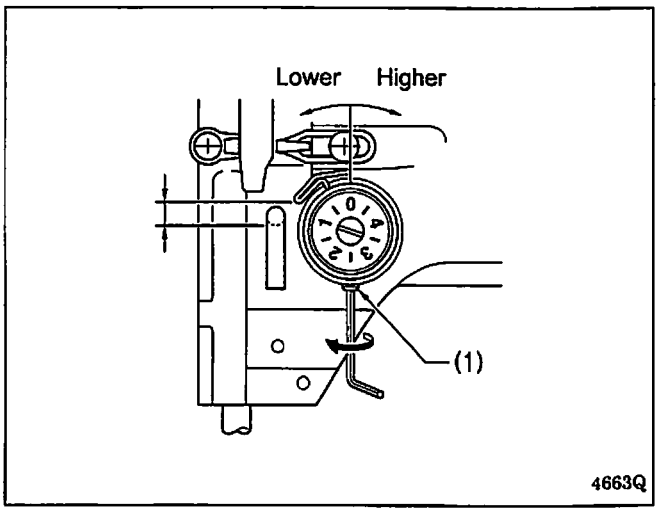


**< Thread take-up spring height >**

Loosen the set screw (1) and turn the tensioner body to adjust the thread take-up spring height.

**< Thread take-up spring tension >**

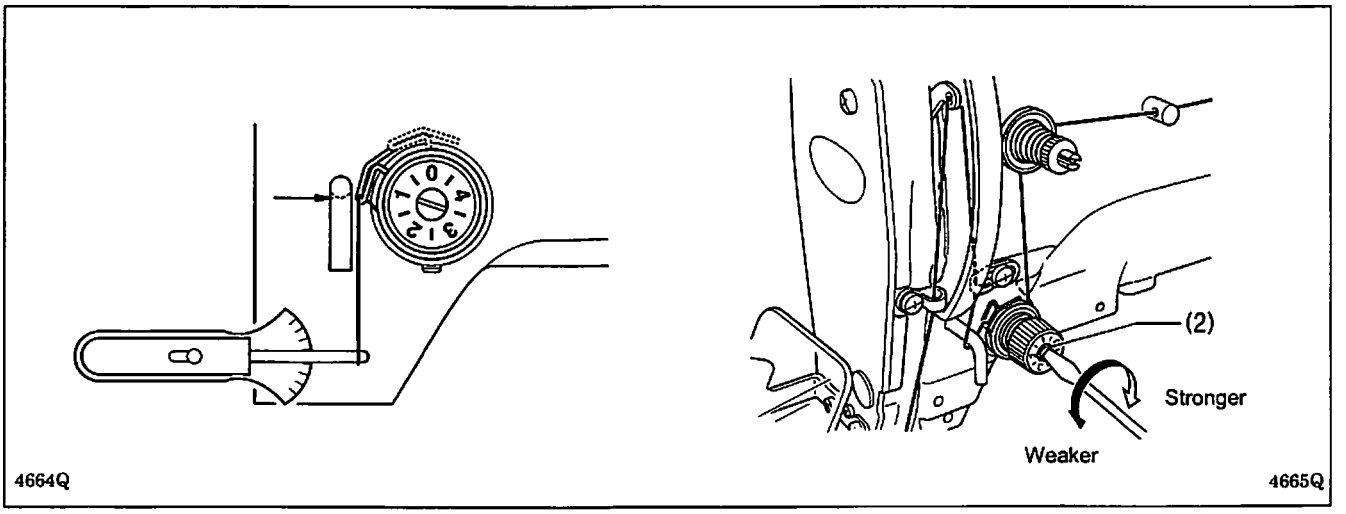


Turn the tension stud (2) with a screwdriver.

* When the spring height (stroke) is great or the spring tension is insufficient, it may cause the thread end length to vary after thread trimming.

## 7-2. Adjusting the needle bar height

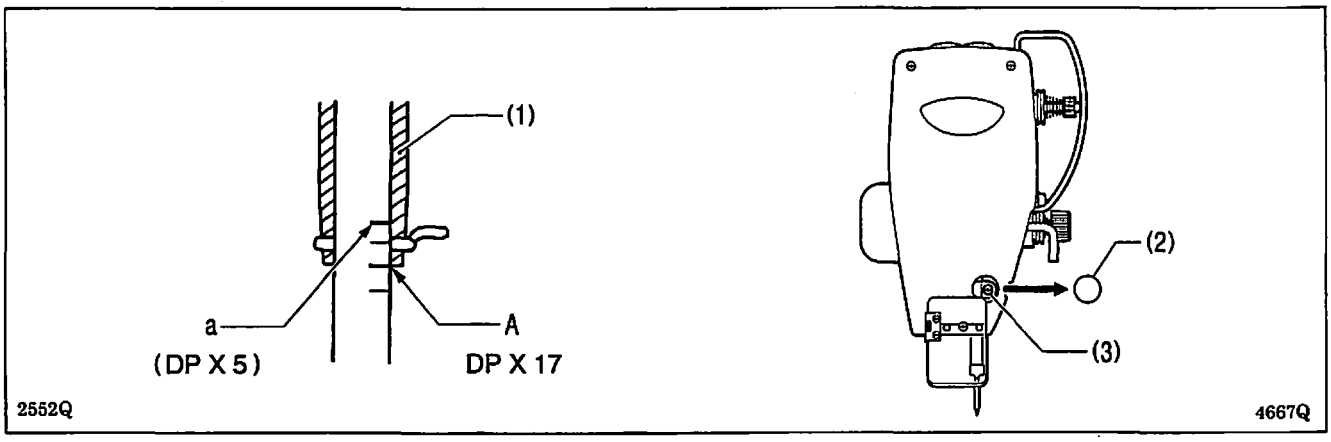


Turn the pulley to move the needle bar to the lowest position. Then remove the rubber cap (2), loosen the screw (3) and then move the needle bar up or down to adjust so that the second reference line from the bottom of the needle bar (reference line A) is aligned with the lower edge of the needle bar bush (1).
* If using a DP x 5 needle, use the highest reference line (reference line a).

## 7-3. Adjusting the needle bar lift amount

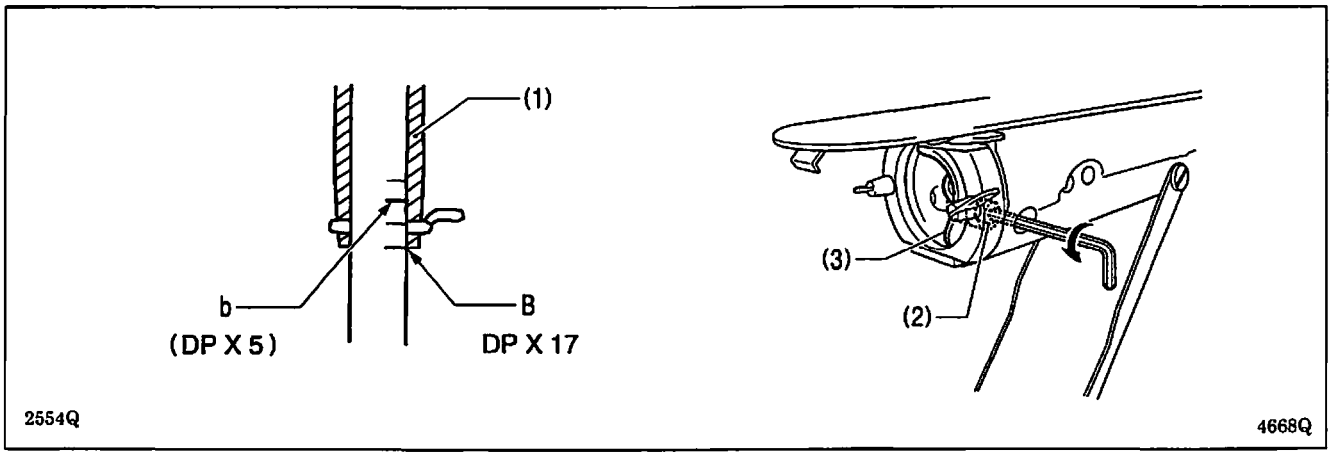


Turn the pulley to raise the needle bar from the lowest position until the lowest reference line on the needle bar (reference line B) is aligned with the lower edge of the needle bar bush (1). Then loosen the bolt (2) and move the driver (3) to adjust so that the tip of the rotary hook is aligned with the needle center line.
* If using a DP x 5 needle, use the second reference line from the top on the needle bar (reference line b).

## 7-4. Adjusting the driver needle guard

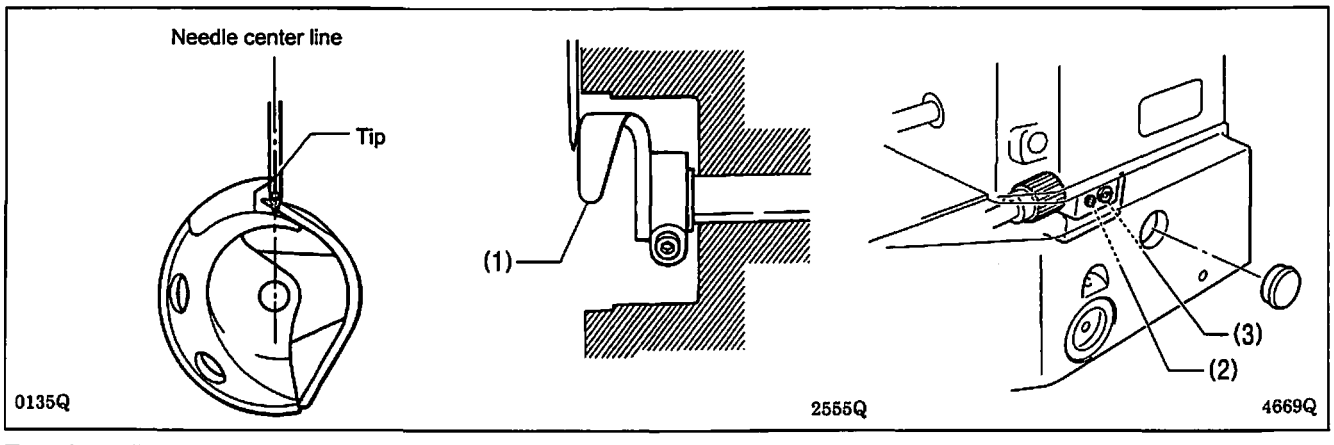


Turn the pulley to align the tip of the rotary hook with the needle center line. Then loosen the set screw (2) and turn the eccentric shaft (3) to adjust so that the driver needle guard (1) contacts the needle.

**Note:**

If the needle contact pressure is too great, skipped stitches may occur. On the other hand, if the driver needle guard (1) is not touching the needle, the tip of the inner rotary hook will obstruct the needle, resulting in an excessively high amount of friction.

## 7-5. Adjusting the needle clearance

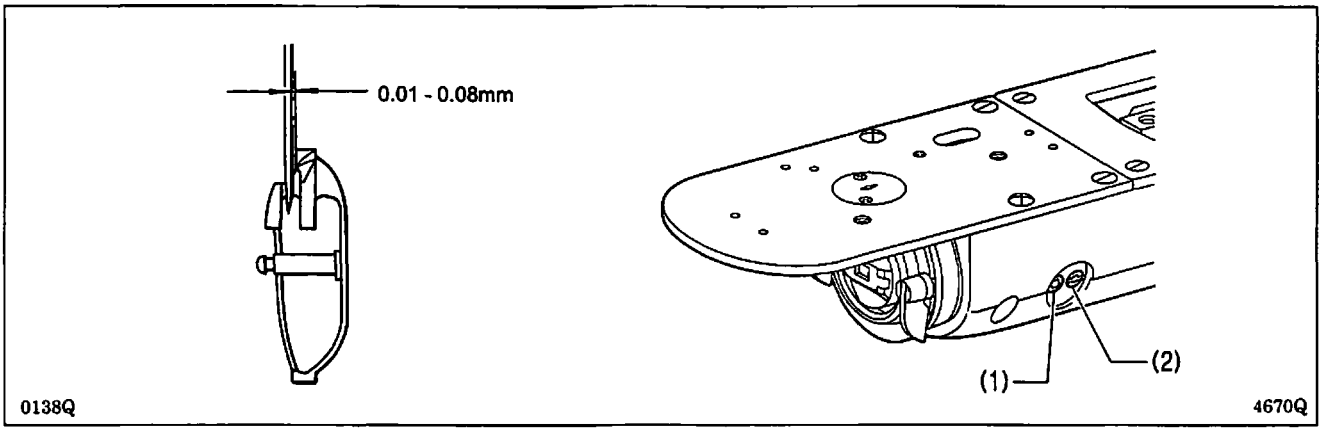


Turn the pulley to align the tip of the rotary hook with the needle center line. Then loosen the set screw (1) and turn the eccentric shaft (2) to adjust so that the clearance between the needle and the rotary hook is 0.01 - 0.08 mm.

## 7-6. Adjusting the shuttle race thread guide

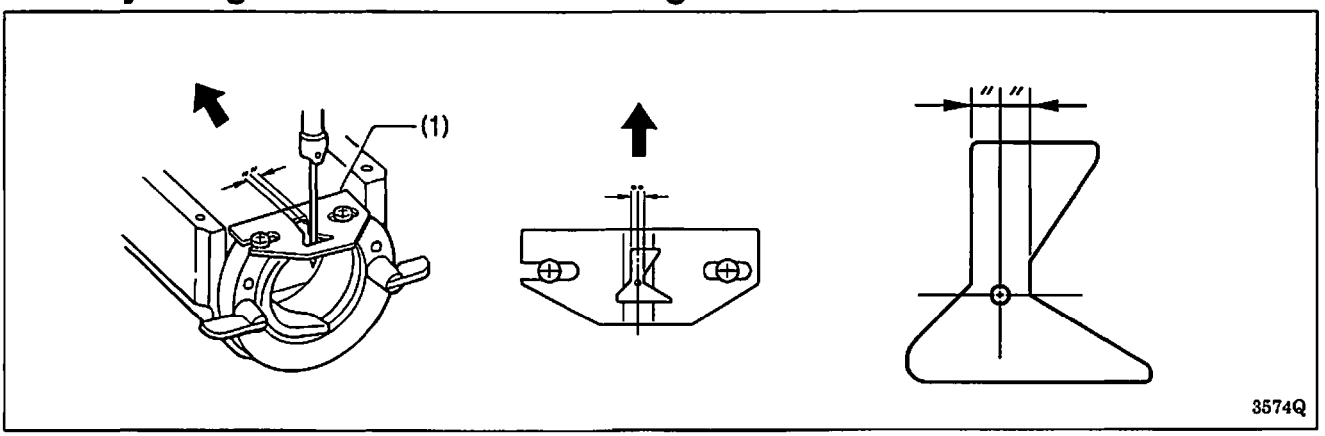


Install the shuttle race thread guide (1) by pushing it in the direction of the arrow so that the needle groove is aligned with the center of the needle plate hole.

**Note:**

If the shuttle race thread guide is in the wrong position, thread breakages, soiled thread or thread entanglements may occur.

The position of the shuttle race thread guide is adjusted at the time of shipment from the factory. It should not be changed if at all possible.

## 7-7. Adjusting the position of the movable knife

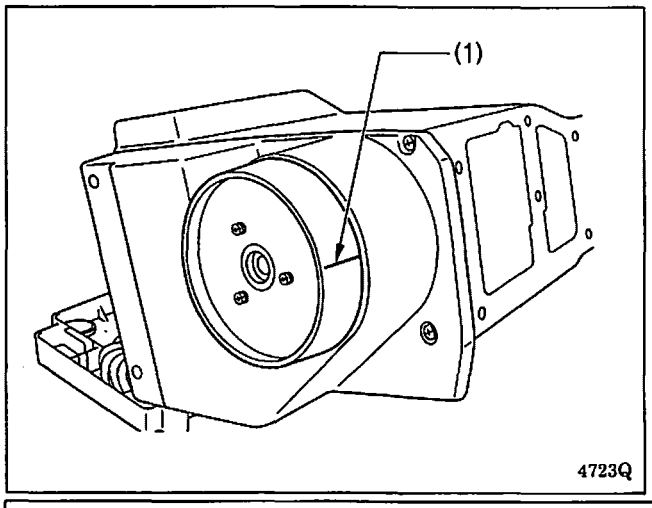


1. Remove the top cover and tilt back the machine head.
2. Turn the machine pulley by hand so that the index mark (1) is near facing straight upward.

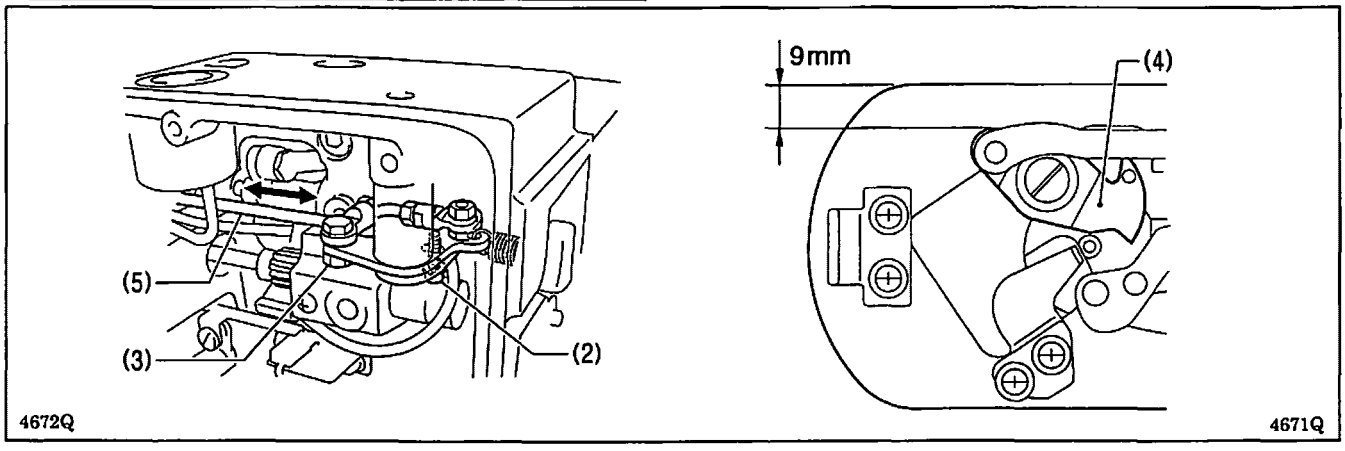


3. Loosen the bolt (2).
4. Use the spanner 10 to turn the nut (3) counterclockwise until it stops.
5. In this condition, move thread trimmer rod H (5) forward or back to adjust so that the distance between the ridge line on the right side of the needle plate and the ridge line on the movable knife (4) is 9 mm.
6. Tighten the bolt (2), and then check the above position once more.

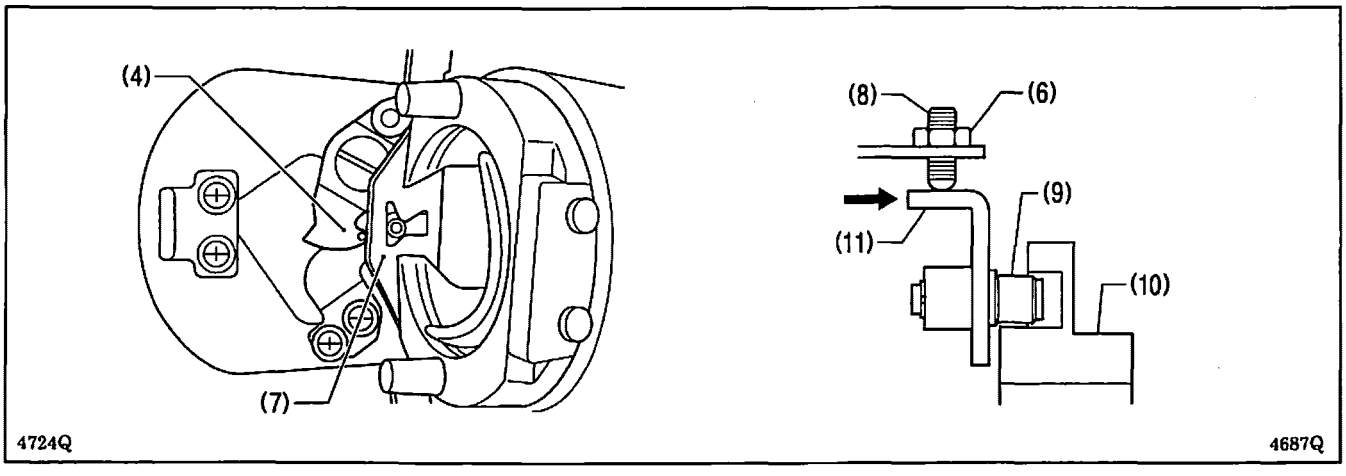


7. Loosen the nut (6), and then turn the set screw (8) to adjust so that the outside of the hole in the movable knife (4) is aligned with the ridge line on the shuttle race thread guide (7).
8. Tighten the nut (6).
9. Turn the pulley by hand to set the needle bar to its lowest point.
10. Check that the collar (9) is not touching the inside of the thread trimmer cam (10). Furthermore, push the driving lever (11) by hand toward the thread trimmer cam (10) so that the collar (9) goes into the groove of the cam, and then release your hand and check that the driving lever (11) returns smoothly to its original position.

## 7-8. Replacing the movable knife and fixed knife

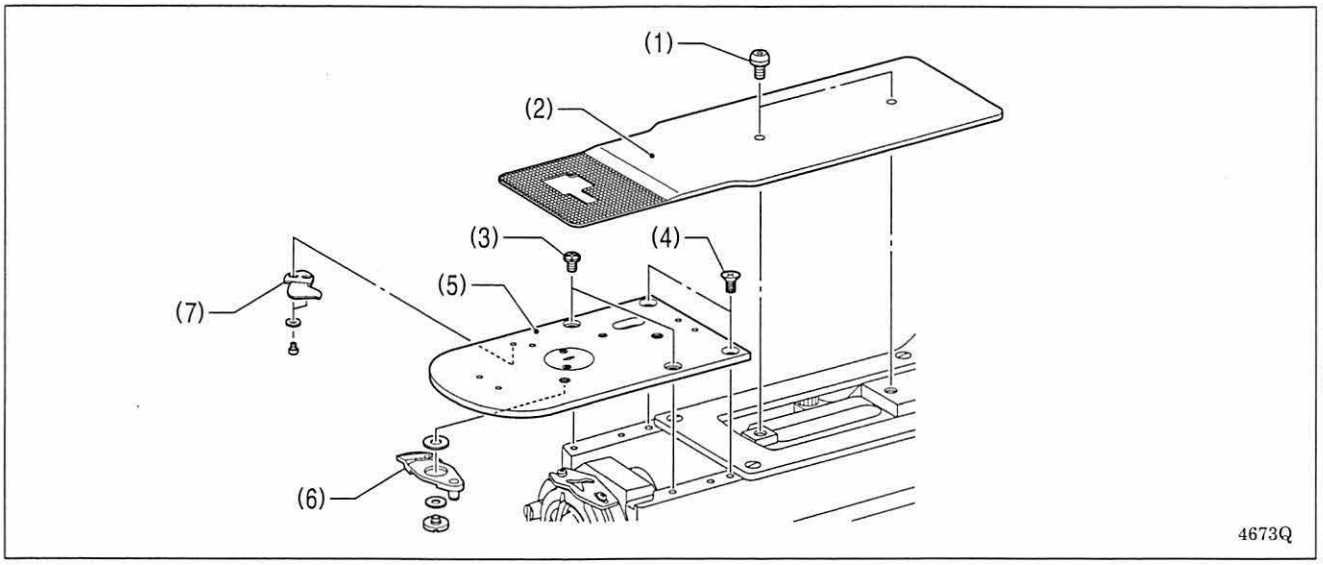


1. Open the shuttle race cover, remove the two screws (1), and then remove the feed plate (2).
2. Remove the two screws (3) and the two flat screws (4), and then remove the needle plate (5).
3. Remove the movable knife (6) and the fixed knife (7).

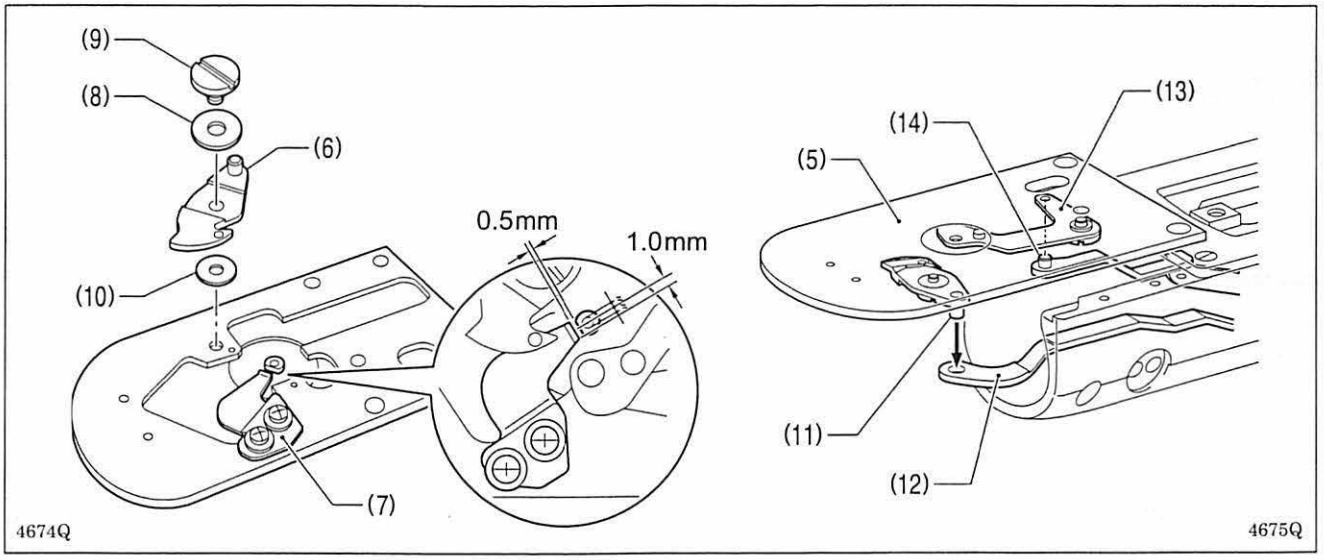


4. Install new fixed knife (7) in the position shown in the illustration.
5. Apply grease to the outside of the collar (8) and the shoulder screw (9), and then install a new movable knife (6).
6. Check that the movable knife (6) and the fixed knife (7) cut the thread cleanly. If necessary, adjust by using the appropriate movable knife spacer (10) (supplied as accessories).
7. Apply grease to the pin (11) of the movable knife, and then insert it into the hole in the movable knife connecting plate (12). Then, while placing the pin (14) of thread nipper connecting plate F into the hole in thread nipper D (13), install the needle plate (5).
8. Check that the center of the needle hole and the needle are aligned.

## 7-9. Adjusting the work clamp lift amount (KE-430D)

Adjust so that the actual maximum lift amount for the work clamp is 17 mm above the top of the needle plate when the maximum work clamp height has been set to 17 mm using the operation panel.

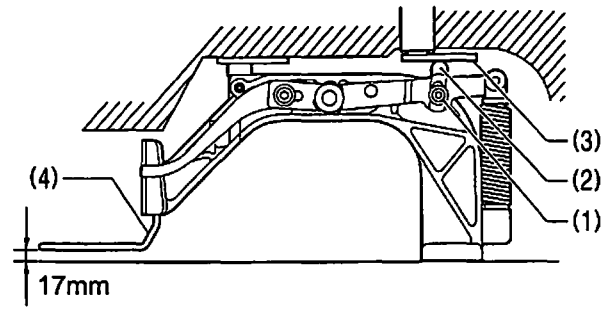


4676Q

1. Loosen the bolt (1) and move the work clamp arm lever plate (2) up or down to adjust.
2. Apply grease to the bottom of the work clamp lifter plate (3), to the top of the work clamp arm lever plate (2) and to the sliding part of the work clamp (4) (grease is already applied at the time of shipment), and check that the movement becomes easier.

## 7-10. Adjusting the button clamp lift amount (BE-438D)

Adjust so that the actual maximum lift amount for the button clamp is 13 mm above the top of the needle plate when the maximum button clamp height has been set to 13 mm using the operation panel.

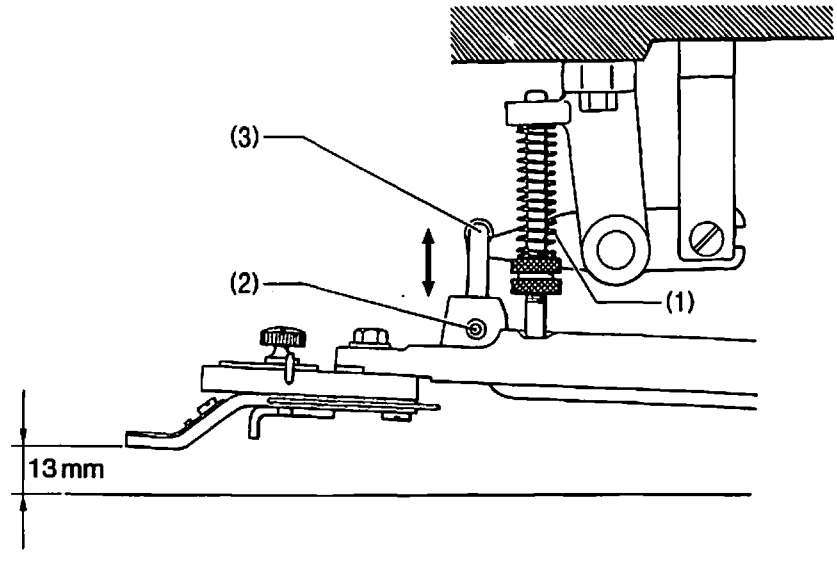


4677Q

Remove the spring (1), loosen the screw (2) and adjust the button clamp holder hook (3) by moving it up and down.
* If the button clamp lift amount is too large, the button clamp will not be raised.

## 7-11. Adjusting the holding pressure (BE-438D)

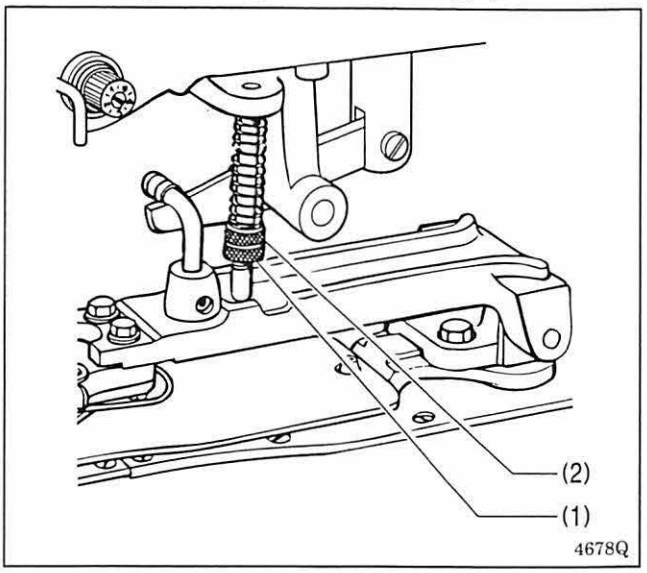


Loosen the nut (1) and turn the nut (2) to the point where it is just tight enough that the material will not slip out of place when it is slightly pulled (keep pressure as slight as possible).

## 7-12. Adjusting the position of the button clamp (BE-438D)

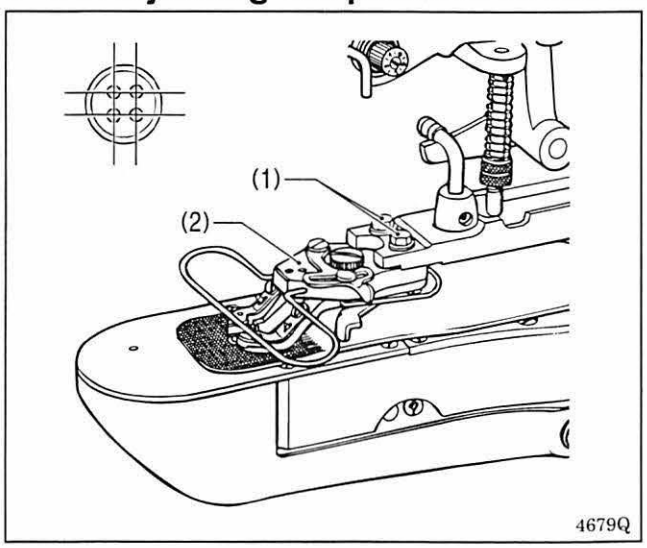


1. Loosen the two bolts (1) and adjust the button clamp base (2) by moving it.
2. Carry out test feeding to check that the needle will go through the button hole with no contact.

## 7-13. Adjusting the thread trimmer cam position

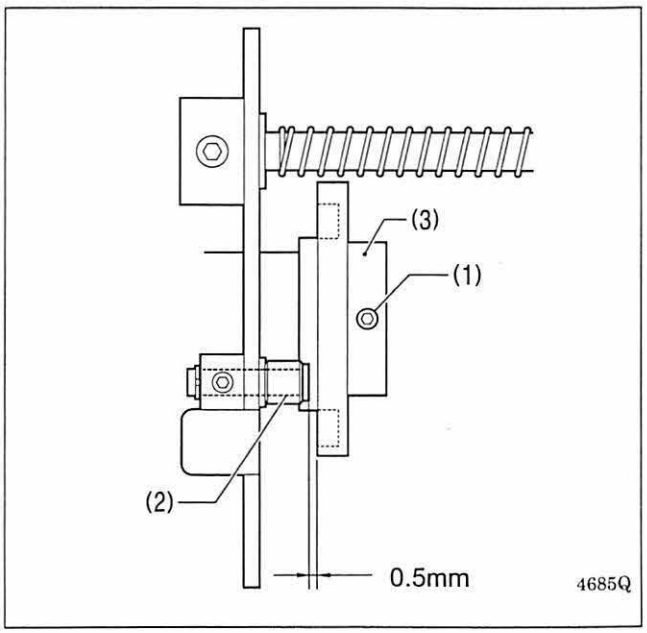


1. Remove the top cover.
2. Loosen the two set screws (1), and then adjust the position of the thread trimmer cam (3) so that the distance between the edge of the collar shaft (2) and the edge of the thread trimmer cam (3) is 0.5 mm. After adjusting, tighten the two set screws (1).

# 7-14. Adjusting the thread wiper

**<Thread wiper height adjustment>**

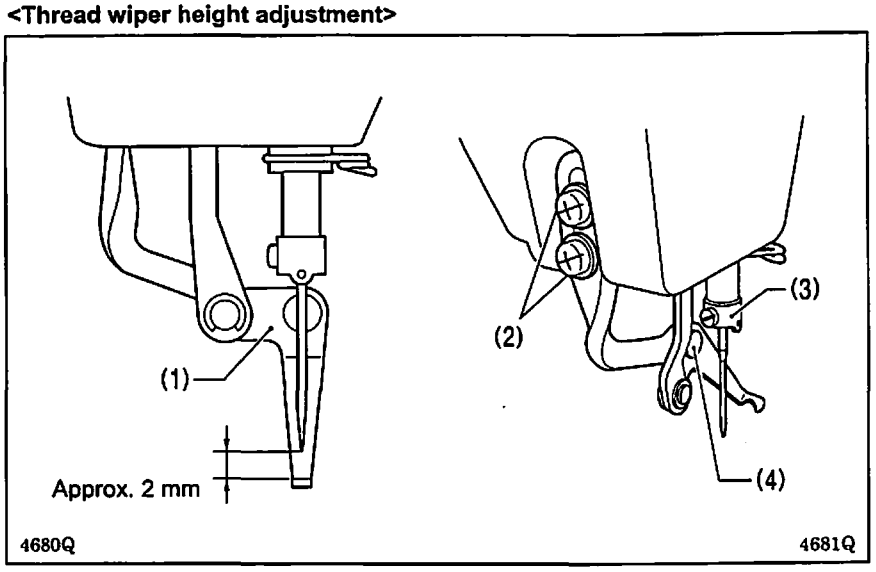


Loosen the two screws (2) and adjust the thread wiper (1) so that the clearance between the top of the thread wiper (1) and the needle point is approximately 2 mm when the thread wiper (1) is aligned with the center of the needle.

**Note:**
Check that the needle bar thread guide (3) and the thread wiper base shaft (4) are not touching at this time.

**< Thread wiper racking width adjustment >**

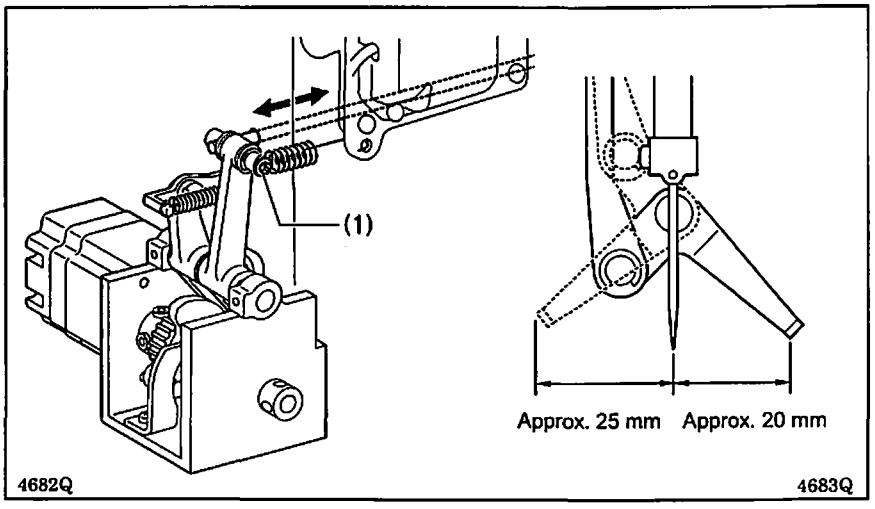


1. Remove the back cover.
2. Loosen the set screw (1) and adjust so that the distance from the thread wiper to the center of the needle is as shown in the illustration.

**<Thread wiper racking timing adjustment>**
You can adjust the thread wiper racking timing to the ideal setting that matches the height of the work clamp, in order to prevent the thread from getting caught when the work clamp is lowered.

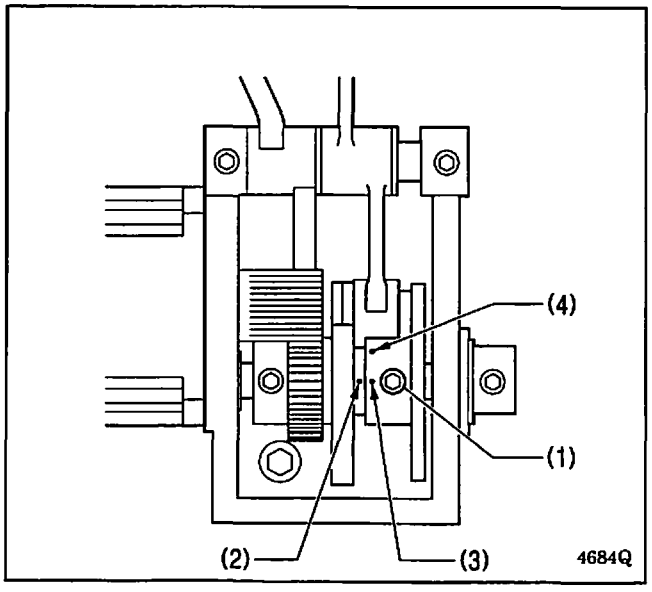


1. Remove the back cover.
2. Loosen the two screws (1), and adjust so that the mark (2) on the cam is in between the two marks (3) and (4) on the thread wiper cam.
   - If mark (2) is closer to mark (3), the thread wiper will move below the work clamp when it moves sideways.
   - If mark (2) is closer to mark (4), the thread wiper will move above the work clamp when it moves sideways.
3. After making the adjustment, switch to work clamp height setting mode and check the thread wiper racking timing.

**Note:**
If the mark (2) is too close to the mark (4), the work clamp and the thread wiper may touch. if this happens, adjust the height of the thread wiper. However, be careful not to let the thread wiper and the needle touch each other.

## 7-15. Adjusting the tension release amount

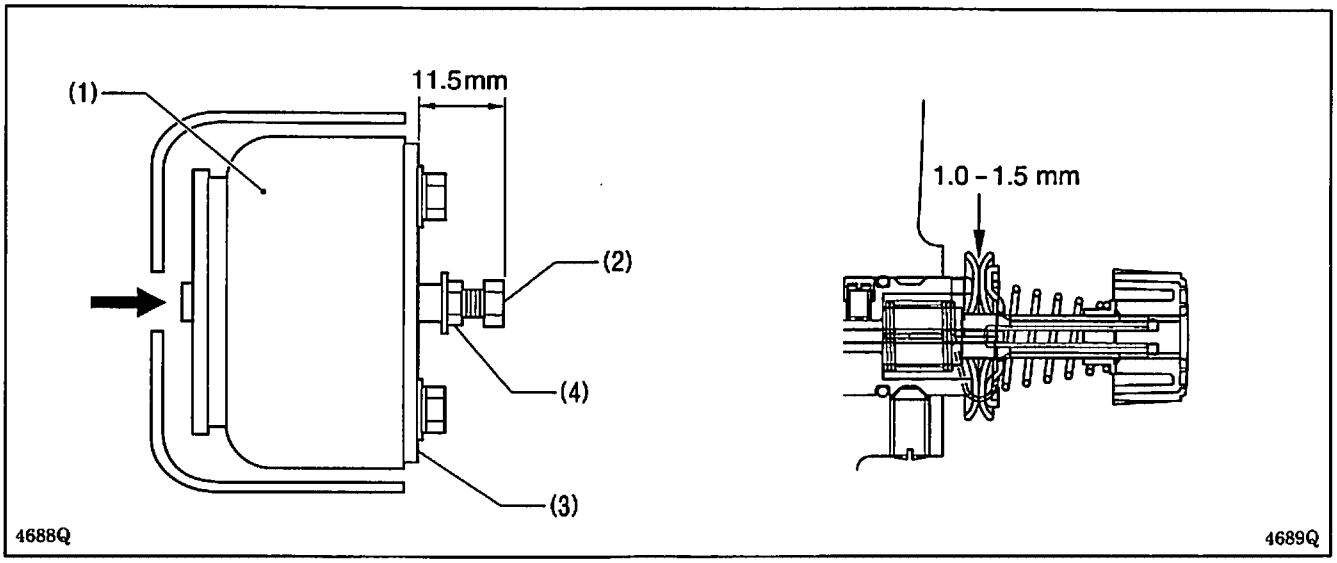


1. Loosen the nut (4) and turn the bolt (2) to adjust so that the distance between the tip of the bolt (2) and the solenoid setting plate (3) is 11.5 mm when the plunger of the tension release solenoid (1) is pushed in as far as it will go.
2. Check that the tension disc opening amount is 1.0 - 1.5 mm when the tension release solenoid (1) is installed to the arm and the plunger is pushed with a screwdriver or similar tool through the hole in the solenoid cover.

* When memory switch No. 551 is set to "ON", the tension release will operate to reduce instances of the thread pulling out at the sewing start.
* If memory switch No. 552 has been set so that the tension release timing is early, you can increase the trailing length for the upper thread.

## 7-16. Adjusting the backlash of the lower shaft gear

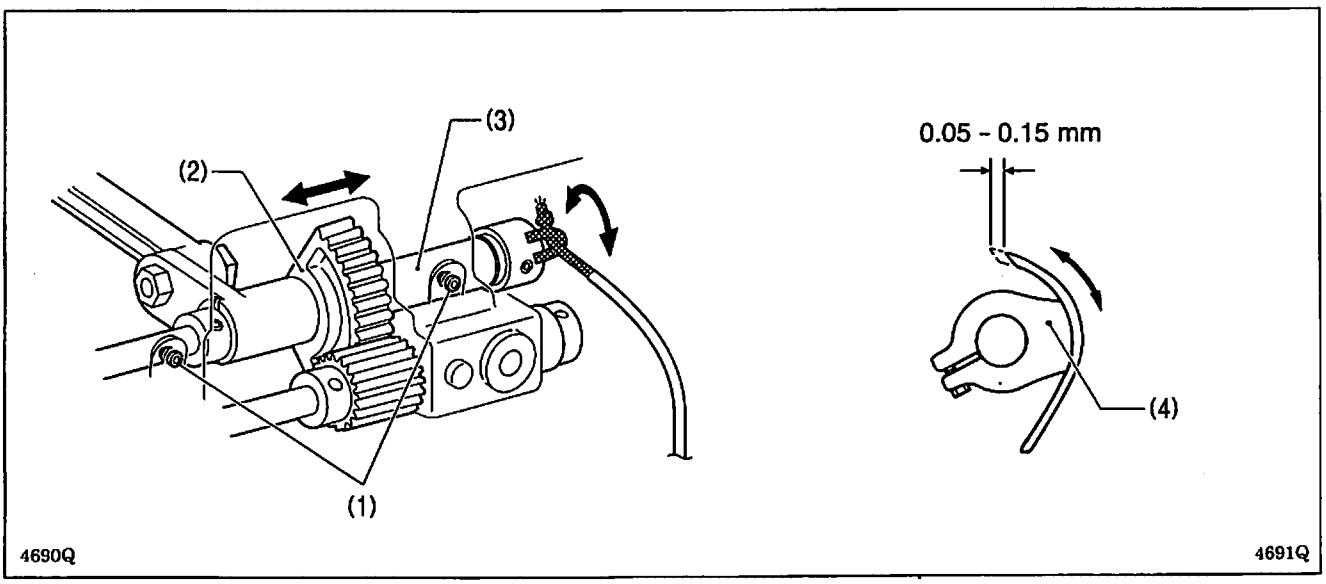


1. Loosen the set screw (1), and move the rock gear (2) to the left and right so that the pulley can rotate easily.
2. Turn the rock gear shaft (3) to adjust the play at the end of the driver (4) to 0.05 – 0.15 mm, and tighten the set screw (1).

# 7-17. Adjusting the home position

## 7-17-1. X-Y feed home position

| | |
|---|---|
| 1 | **Turn the pulley to set the needle to the needle up stop position.** |
| 2 | While pressing the ▼ ▲ keys simultaneously, turn on the power switch.<br>* Keep pressing the ▼ ▲ keys until the model name is displayed and the buzzer beeps once.<br>• "orG" will flash in the PROGRAM No. display and the offset value (default: 0) will be displayed in the menu display.<br>TEST indicator and X-SCALE indicator light<br>4569Q 4443Q 4421Q |
| 3 | Press the SELECT key so that either the X-SCALE indicator or the Y-SCALE indicator illuminates.<br>4570Q |
| 4 | Press the RESET key.<br>• Home position detection will be carried out, and the feed mechanism will stop at the currently-registered home position.<br>* If you press the RESET key for 2 seconds or more at this time, the offset value will be reset to " 0 ". |
| 5 | Use the home position standard plate and press the ▲ or ▼ key to change the offset value (-999 to 999) so that the needle drops at the home position.<br>• The feed mechanism will move in conjunction with the setting value.<br>4571Q |
| 6 | Press the RESET key.<br>• The feed mechanism will move to the home position. Check the home position. |
| 7 | **Repeat steps 5 and 6 to adjust the home position.** |
| 8 | **End adjustment mode.**<br>Press the TEST key.<br>• The display will return to the normal display and the sewing machine will switch to home position detection standby.<br>TEST indicator switches off |

**Note:**
Always be sure to press the RESET key and check the home position before ending adjustment mode. If you end adjustment mode without checking the home position, error "E202" may be generated.

## 7-17-2. Work clamp lift home position

| | |
|---|---|
| 1 | **Turn the pulley to set the needle to the needle up stop position.** |
| 2 | 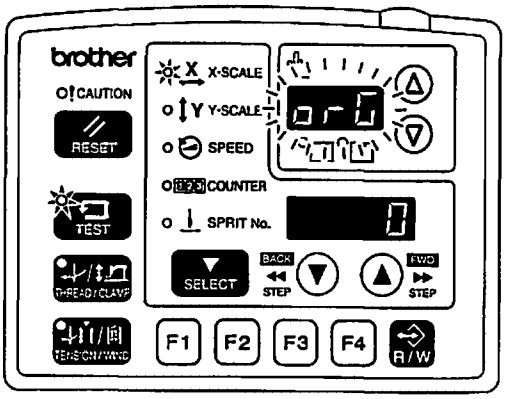 <br>TEST indicator and X-SCALE indicator light<br><br>While pressing the ▼ ▲ keys simultaneously, turn on the power switch.<br>* Keep pressing the ▼ ▲ keys until the model name is displayed and the buzzer beeps once.<br>  <br> 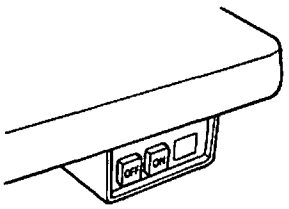 <br>• "orG" will flash in the PROGRAM No. display and the offset value (default: 0) will be displayed in the menu display.<br><br>4569Q 4443Q 4421Q |
| 3 |  <br>THREAD/CLAMP indicator lights<br><br>Press the SELECT key so that either the X-SCALE indicator or the Y-SCALE indicator illuminates.<br>  |
| 4 |  <br>Press the RESET key.<br>• Home position detection will be carried out, and the work clamp will stop at the currently-registered home position.<br>* If you press the RESET key for 2 seconds or more at this time, the offset value will be reset to " 0 ". |
| 5 | 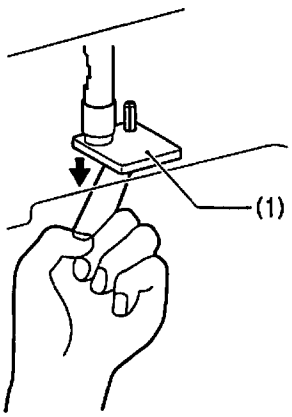 <br>Touch the bottom of the work clamp lifter plate and check the position where it starts to lower.<br><br>Press the ▲ or ▼ key to change the offset value (-999 to 999) so that the work clamp lifter plate (1) moves to the position where it starts to lower.<br> 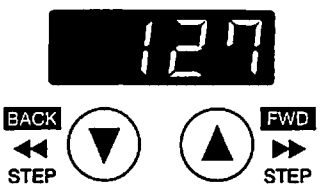 <br>• The work clamp lifter plate (1) will move in conjunction with the setting value.<br><br>4572Q 4692Q |
| 6 |  <br>Press the RESET key.<br>• The work clamp will move to the home position. Check the home position. |
| 7 | **Repeat steps 5 and 6 to adjust the home position.** |
| 8 | **End adjustment mode.**<br>  <br>TEST indicator switches off<br><br>Press the TEST key.<br>• The display will return to the normal display and the sewing machine will switch to home position detection standby. |

**Note:**
Always be sure to press the RESET key and check the home position before ending adjustment mode. If you end adjustment mode without checking the home position, error "E303" may be generated.

## 7-18. Adjusting the position of the thread nipper

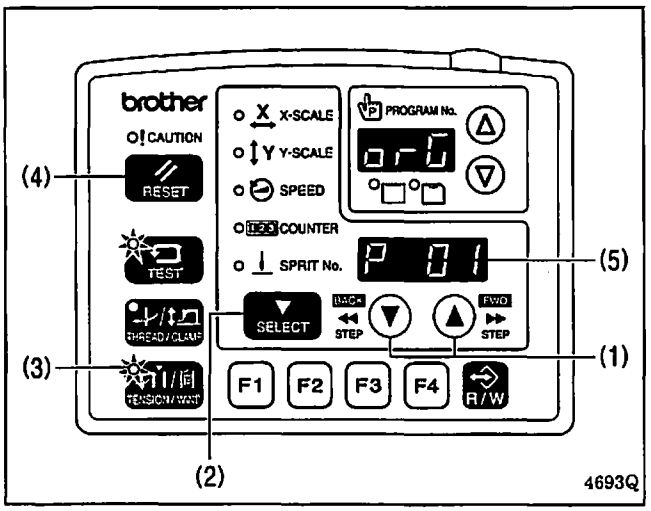


1. Turn the pulley to set the needle to the needle up stop position.
2. While pressing the ▼ ▲ keys (1) simultaneously, turn on the power switch.
   * Keep pressing the ▼ ▲ keys (1) until the model name is displayed and the buzzer beeps once.
3. Press the SELECT key (2) until the TENSION/WIND indicator (3) illuminates.
4. Press the RESET key (4).
   * Home position detection will be carried out and "P 01" will be displayed in the menu display (5).

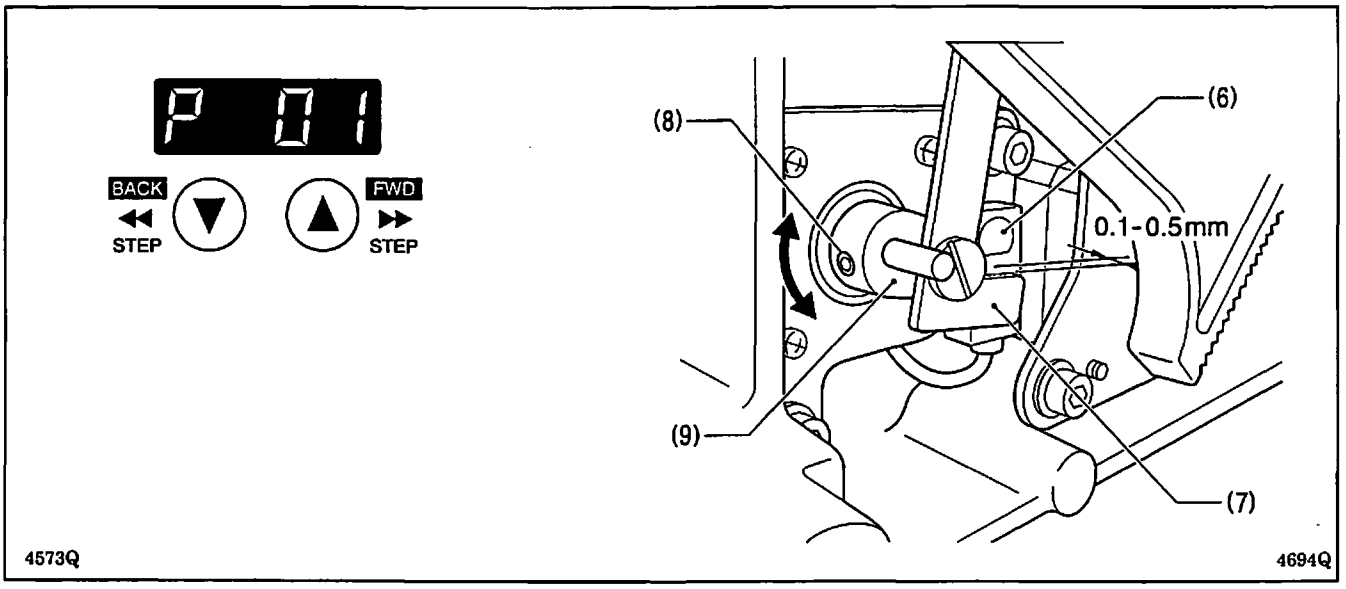


5. Loosen the two set screws (8) and move the motor lever (9) to adjust so that the clearance between the home position sensor (6) and thread nipper connecting plate B (7) is 0.1 - 0.5 mm.

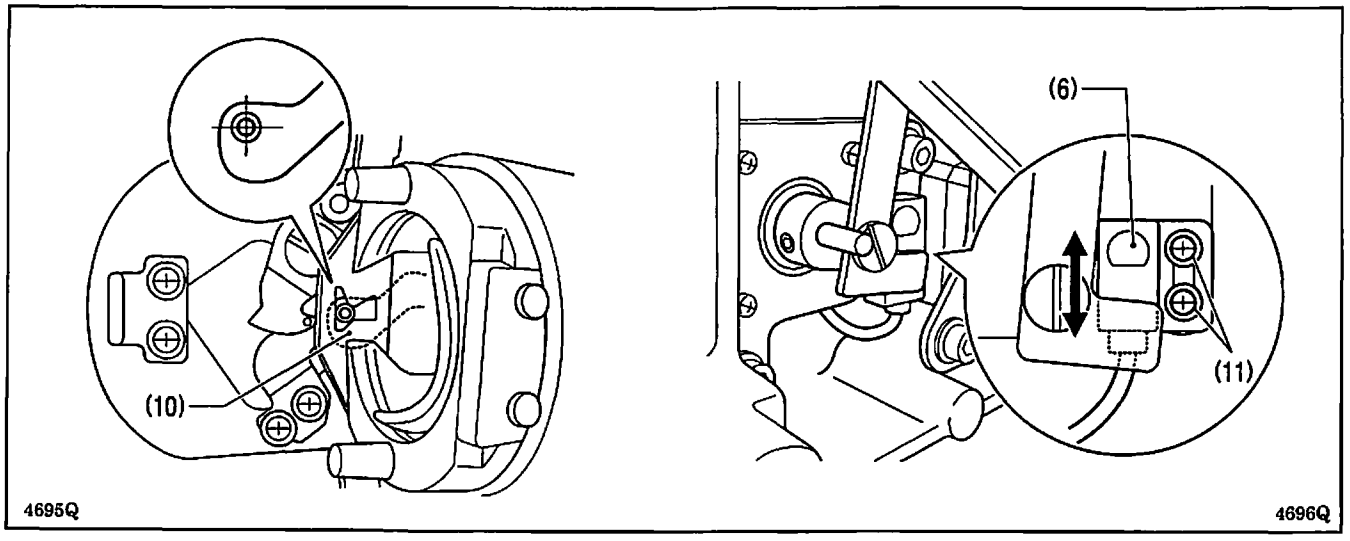


6. Loosen the two screws (11) and move the home position sensor (6) to adjust so that the center of the needle hole and the center of the hole in the thread nipper D assembly (10) are aligned.
7. Press the RESET key (4) to carry out home position detection, and check that the home position described above is correct.
8. Repeat steps 6 and 7 to adjust the home position.

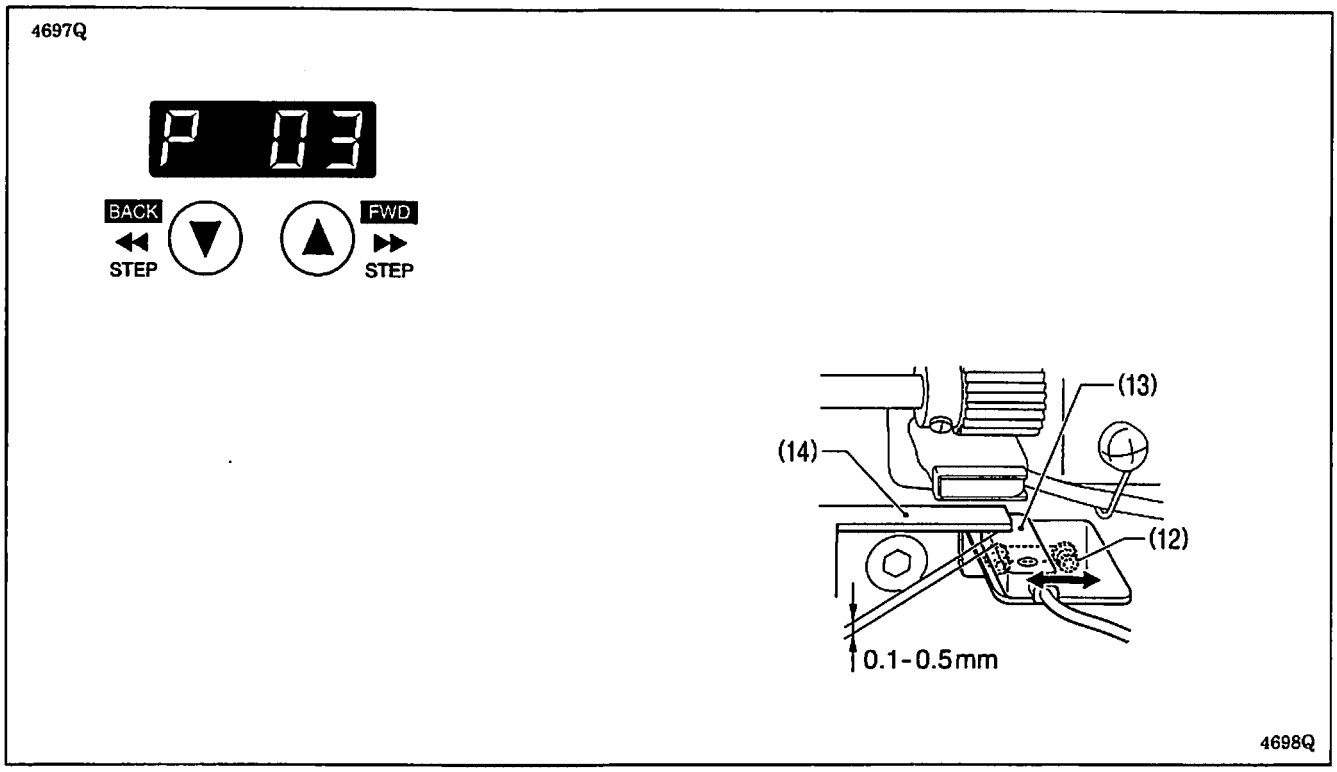


9. Press the ▲ key so that "P 03" is displayed in the menu display.
10. Loosen the two bolts (12).
11. Move the home position sensor (13) so that the clearance between the thread nipper connecting plate F assembly (14) and the home position sensor (13) is 0.1 - 0.5 mm, and then tighten the bolts (12) at the position where the red indicator of the sensor changes from off to illuminated.
12. Press the TEST key to end the adjusting mode.

**<Thread nipper timing adjustment>**
You can use the setting for memory switch No. 553 to adjust the thread nipper timing.
- When the thread nipper timing is made faster, the thread will not pull out so easily.
- When the thread nipper timing is made slower, the thread will not get tangled so easily.

## 7-19. Adjusting the needle up stop home position

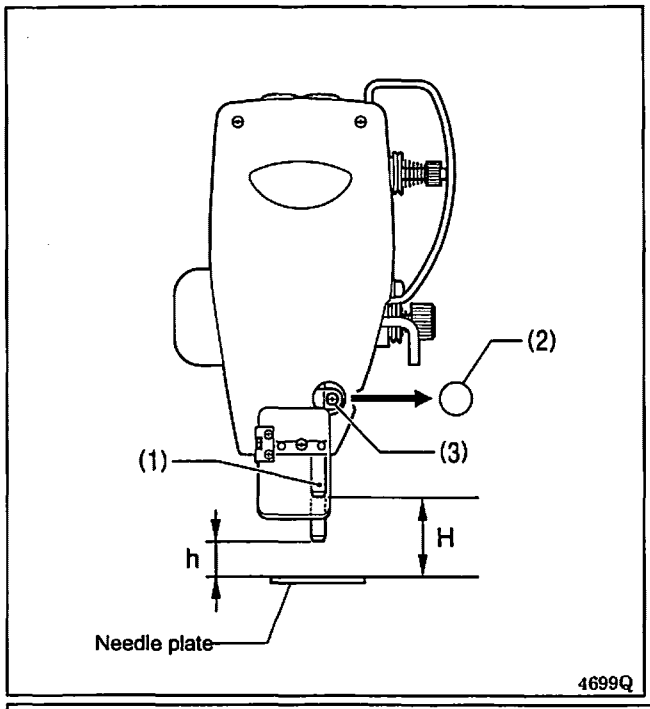


1. Remove the needle, the needle bar thread guide and the feed plate.
2. Turn the pulley to move the needle bar (1) to the lowest position.
3. Remove the rubber cap (2) from the face plate, and then loosen the screw (3) of the needle bar clamp.
4. Adjust so that the distance h is as shown below when the needle bar is at its lowest position.
5. Tighten the screw (3), and then install the rubber cap (2).
6. Turn the machine pulley to lower the needle bar (1) from its highest position to height H.

| Needle | DP x 17 | | DP x 5 |
|---|---|---|---|
| | KE-430D | BE-438D | |
| H | 52.7 mm | 53.87 mm | 47.6 mm |
| h | 18.0 mm | | 12.9 mm |

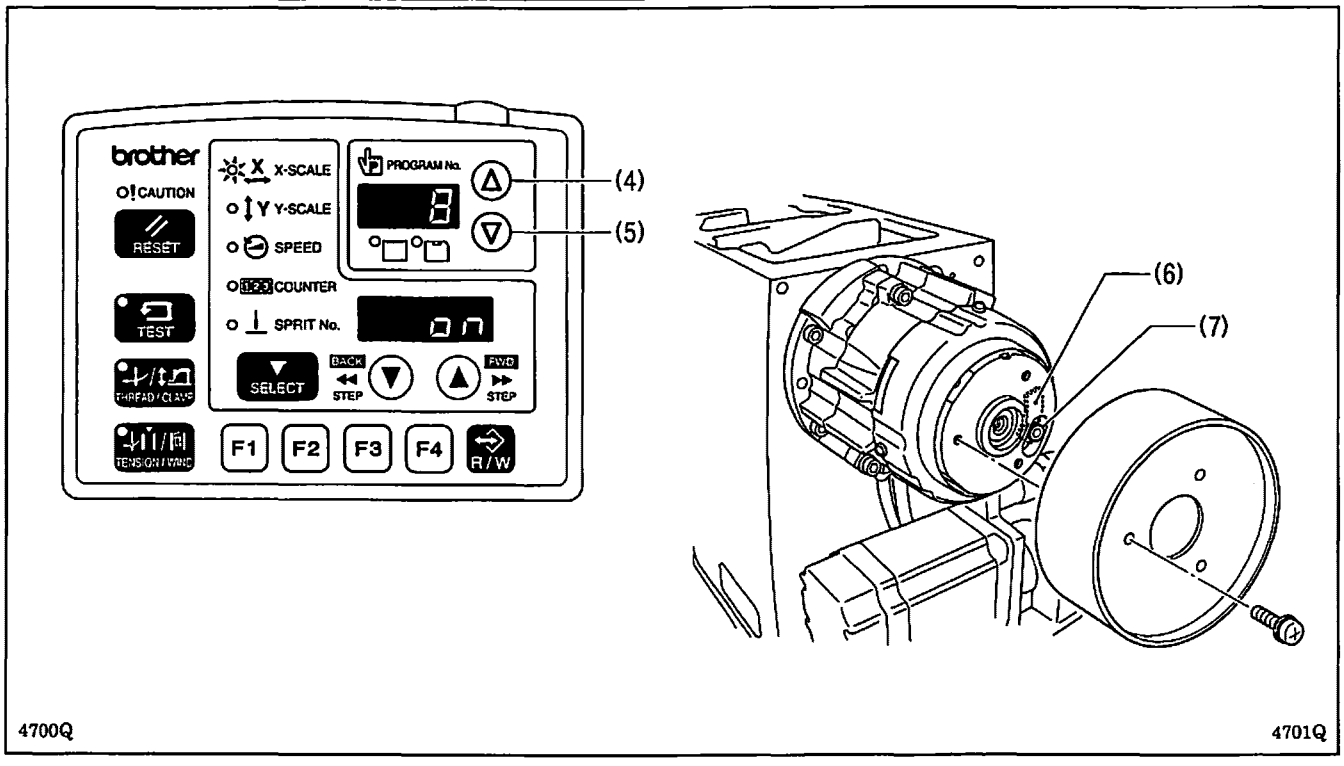


7. While pressing the Δ key (4), turn on the power switch.
   * Keep pressing the Δ key (4) until the model name is displayed and the buzzer beeps once.
8. Press the Δ key (4) or ∇ key (5) to select check code " 8 ". (Refer to "2-9. Input checking method".)
9. Release the machine pulley and loosen the bolt (7) of the magnet (6) by 1/4 of a turn.
10. Move the magnet (6) to the point where the menu display (7) changed from " on" to "oFF", and then tighten the bolt (7).

## 7-20. Adjusting the needle up stop position

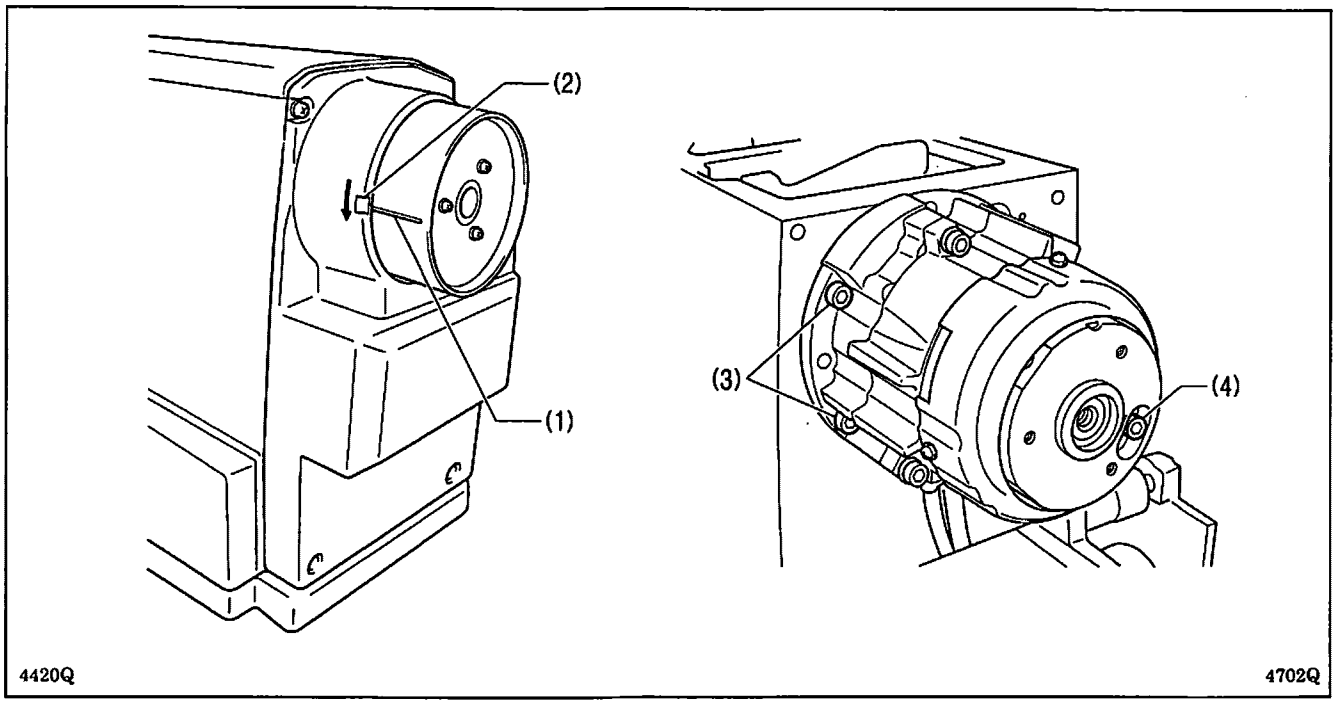


The needle up stop position is adjusted using the operation panel so that the index mark (1) on the machine pulley is within the range of the marks (2) on the back cover.
The standard needle up stop positions are as follows.

KE-430D: 5.0 - 5.5 mm below the highest position of the needle bar
BE-438D: 7.6 - 8.1 mm below the highest position of the needle bar

**Note:**

When the four bolts (3) of the sewing machine motor and the bolt (4) of the magnet are loosened, the feed timing may move out of adjustment. Do not loosen these bolts when the settings are at the factory defaults or after adjusting the needle up stop home position.

**[Adjustment method]**

| | | |
|---|---|---|
| 1 | 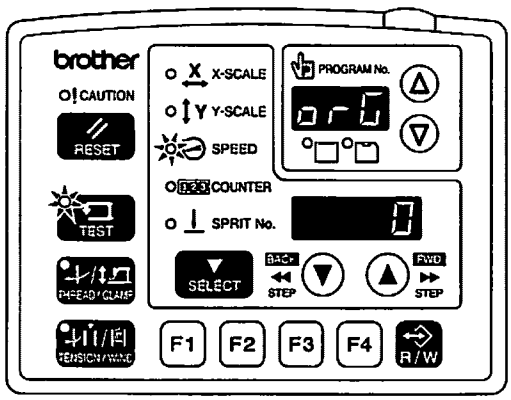 <br>TEST indicator and SPEED indicator light | While pressing the ∇ Δ keys simultaneously, turn on the power switch.<br>* Keep pressing the ∇ Δ keys until the model name is displayed and the buzzer beeps once.<br>• "orG" will flash in the PROGRAM No. display and the offset value (default: 0) will be displayed in the menu display.<br>4703Q |
| 2 | 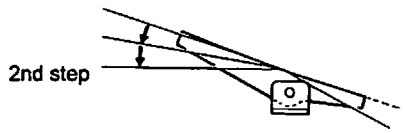 | Depress the foot switch to the 2nd step.<br>• X-Y home position detection will be carried out and the "orG" will stop flashing and illuminate steadily.<br>4441Q |

| | | |
|---|---|---|
| 3 | 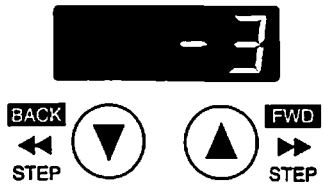 | Press the ▲ or ▼ key to set the offset value (-10 - 10).<br>• When you press the ▲ key, the needle bar will drop, and when you press the ▼ key, it will rise.<br>4704Q |
| 4 | 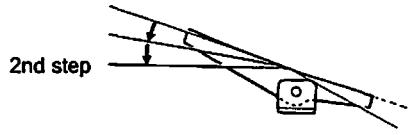 | Depress the foot switch to the 2nd step.<br>• The upper shaft will move one stitch and stop at the offset value that has been set.<br>4441Q |
| 5 | **End adjustment mode.**<br>  <br>TEST indicator switches off | Press the TEST key.<br>• The offset value will be memorized and the sewing machine will switch to home position detection standby. |

## 7-21. Checking the machine head switch

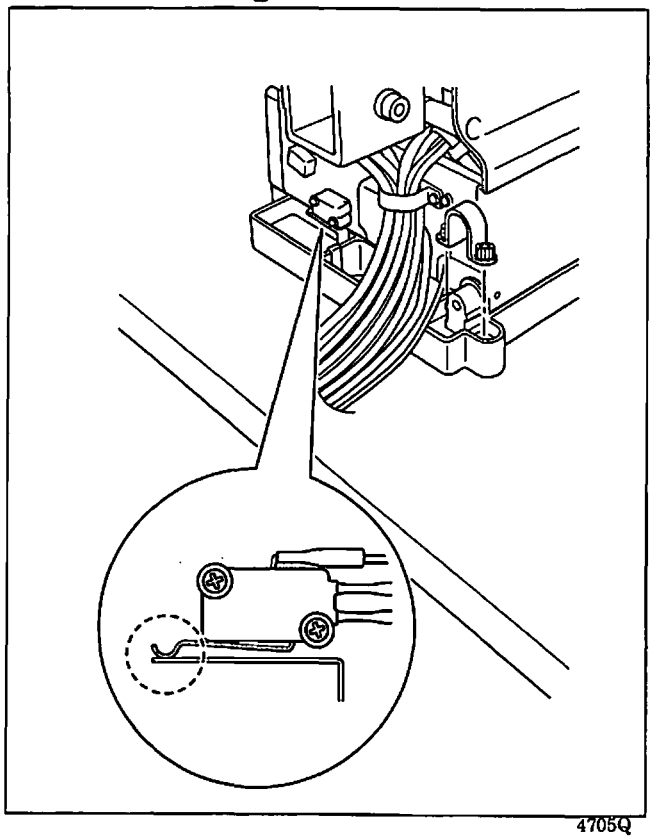

4705Q

Check that the machine head switch is turned on as shown in the illustration.

**Note:**
If the machine head switch is not turned on, error [E050] or [E051] or [E055] will be displayed.

# 8. Applying grease (When "GREASEUP" appears)

If "GrE" and "AS.UP" flash on the PROGRAM No. display (1) and the menu display (2) respectively, and a buzzer sounds when the power switch is turned on, it means that grease needs to be applied. (The sewing machine will not operate at this time, even if the foot switch is depressed.)

Apply grease while referring to the following page.

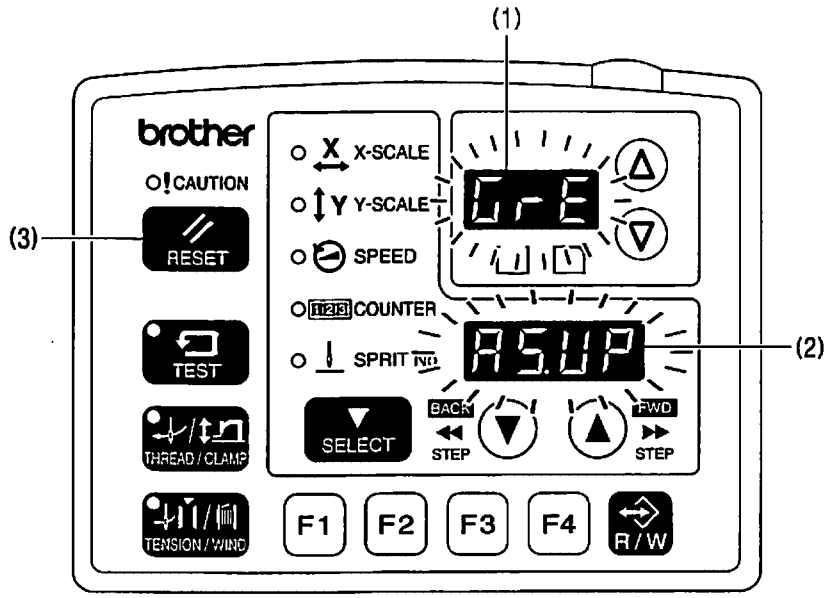


4485Q

**<To continue sewing temporarily without applying grease>**

1. Press the RESET key (3).
2. The PROGRAM No. display (1) and the menu display (2) will change to the normal displays, and sewing can be carried out by depressing the foot switch.

**Note:**

- "GrE" and "AS.UP" will continue to be displayed each time the power is turned on until grease is applied and the notification is reset by carrying out the procedure on the following page.
- If you continue to use the sewing machine after the "GrE" and "AS.UP" notification appears without applying grease (or without carrying out the reset procedure), "E100" will appear after a certain period of time and the sewing machine will be forcibly prevented from operating for safety reasons.

  If this happens, apply grease and carry out the reset procedure.

* **If you continue to use the sewing machine after carrying out the reset procedure but without applying grease, problems with the sewing machine may result.**

## 8. Applying grease (When "GREASEUP" appears)

**<Applying grease>**

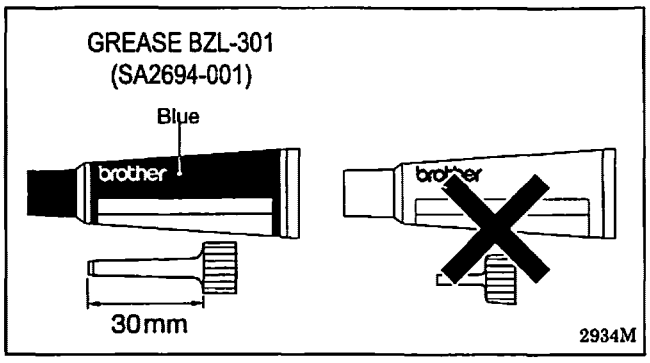


**Note:**
- Use only the grease <BZL-301 (SA2694-001) in the blue tube> specified by Brother.
- Do not use the BZL-300 (SA2355-001) grease in the white tube with this sewing machine.
- Do not use the BZL-301 (SA2694-001) grease in the blue tube for any models except for those which are indicated with "Use only the grease <BZL-301 (SA2694-001)> specified by Brother".

**Purchase the "grease unit" (SA2693-001) to use for applying grease.**

**1. Using the tube**

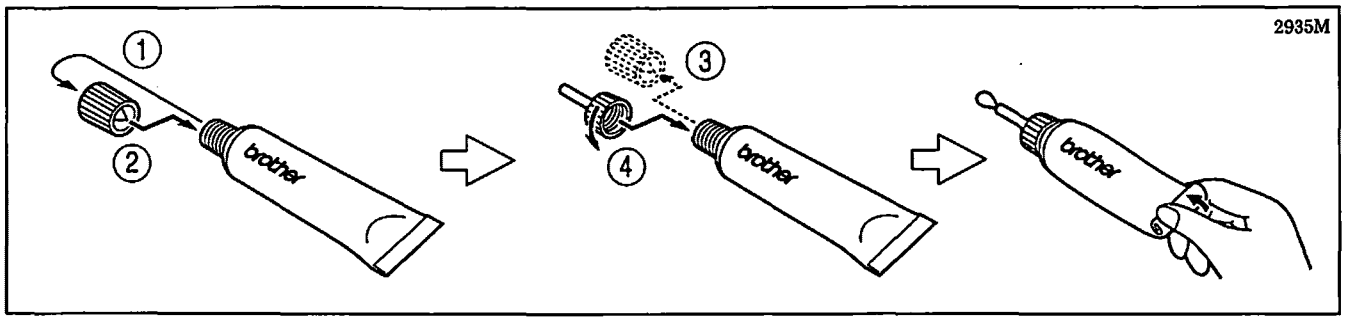


**2. Applying grease**

Follow the procedure below to apply grease to the places indicated by arrows on the next page.

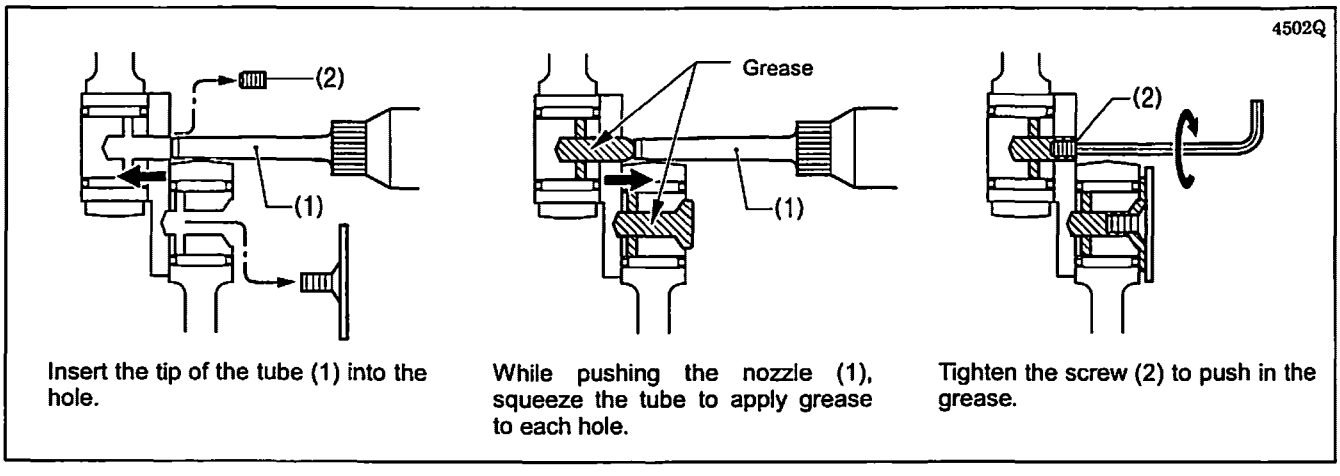


Insert the tip of the tube (1) into the hole.

While pushing the nozzle (1), squeeze the tube to apply grease to each hole.

Tighten the screw (2) to push in the grease.

1. Turn off the power switch.
2. Remove the screw (2). (Refer to the next page for greasing locations.)
3. While turning the machine pulley by hand to move the needle bar up and down, apply grease to each hole until the grease overflows slightly.
4. Tighten the screw (2) to push in the grease.

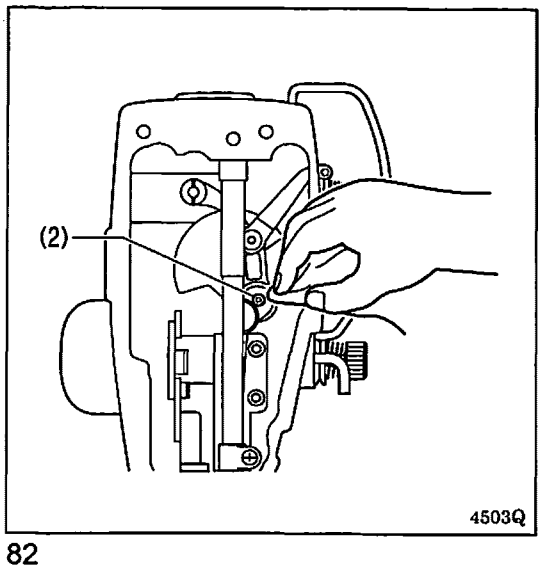


5. Turn the machine pulley by hand to move the needle bar up and down several times in order to disperse the grease.
6. Use a cloth to wipe away any excess grease from around the screw (2).
7. Apply grease to all locations shown on the next page in the same way.
8. After this, carry out the reset procedure given on the next page.

**Note:**
- Once the grease tube has been opened, remove the nozzle from the tube, attach the cap securely and store the tube in a cool dark place.
- The grease should be used as quickly as possible.
- When using the grease again, remove any old grease from inside the nozzle first.

(Store the tube away carefully once the tube has been opened, otherwise the grease remaining inside the tube may deteriorate, and this may affect its lubricating performance.)

**<Grease application locations>**

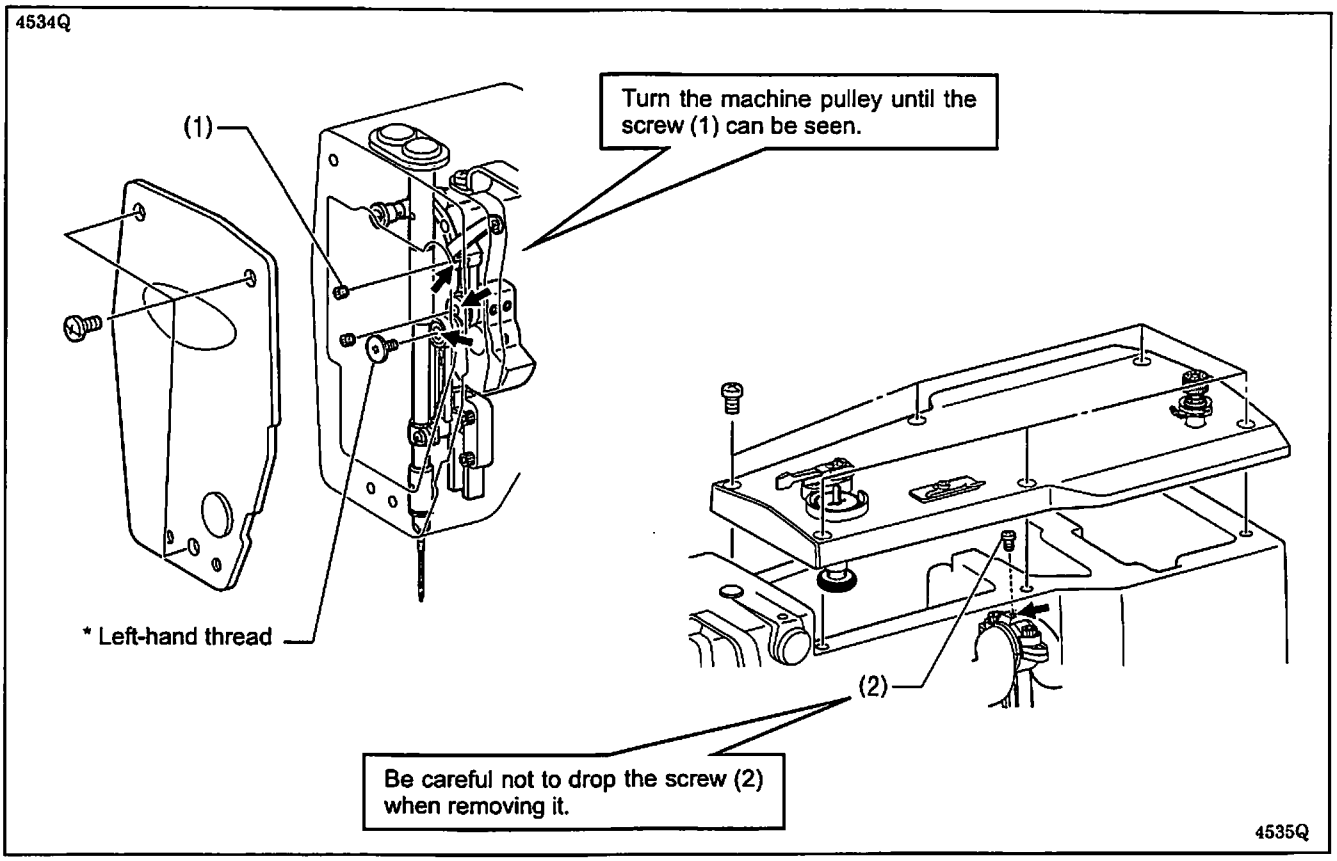


**<Resetting the grease up counter>**

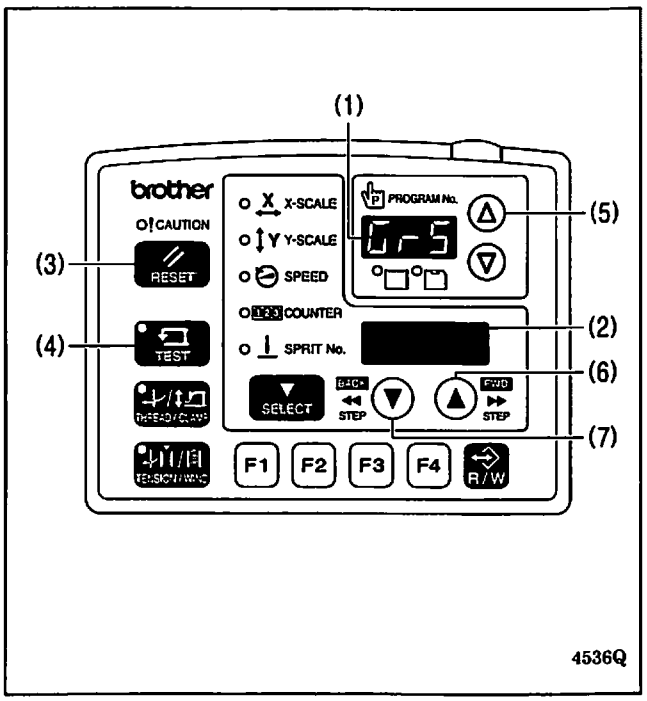


Once the grease has been applied, follow the procedure below to reset the cumulative number of stitches between grease applications.

1. Turn on the power switch. "GrE" and "AS.UP" will flash in the program No. display (1) and the menu display (2) and the buzzer will sound.
2. Press the RESET key (3). The program No. display (1) and the menu display (2) will return to their normal displays.
3. While pressing the TEST key (4), press the Δ key (5). "GrS" will appear in the program No. display (1), and the cumulative number of stitches until greasing is required will appear in the menu display (2) in units of 100,000 stitches.
   (The number of stitches will be displayed in all seven digits of the program No. display (1) and menu display (2) in units of 100 stitches while the ▲ key (6) is being pressed.)
4. Press the ▼ key (7). The cumulative number of stitches will be reset to "0000".
5. Press and hold the RESET key (3) for 2 seconds or more. (This completes the reset procedure.)
6. When you press the TEST key (4), the displays will return to their normal displays.

# 9. ELECTRIC MECHANISM

**⚠ DANGER**

⚠ Wait at least 5 minutes after turning off the power switch and disconnecting the power cord from the wall outlet before opening the face plate of the control box. Touching areas where high voltages are present can result in severe injury.

## 9-1. Precautions at the time of adjustment

**Pay attention to the following when opening the control box for maintenance.**

**Electric shock**

Some large capacitors may have a high voltage remaining in them for up to 5 minutes after the power is turned off. To prevent electric shock, wait at least 5 minutes after the power is turned off before doing the following:

- Opening and closing the control box
- Replacing fuses
- Separating and joining connectors
- Measuring resistance
- Doing anything with a possibility of touching something inside the control box

Some adjustments require measuring the voltage while the power is turned on with the control box kept open.
In such a case, be careful not to touch any place other than that for the measurement. In addition, always keep in mind that a high voltage remains for about 5 minutes after power is turned off.

**Injury**

While the power is turned on, the cooling fan of the control box operates; be careful not to get caught in it.
When separating or rejoining connectors, and measuring something, be careful not to cut your fingers on metal parts such as heat sinks and covers.

## 9-2. Components inside the control box and the operation panel

**Main P. C. board**
Secured to the side. This PCB serves to control machine operation.

**PMD P. C. board**
Secured to the bottom. This PCB drives the pulse motor and solenoids.

**Power supply motor P. C. board**
Secured to the back. This PCB generates the voltages that are required for each control operation and drives the main shaft motor.
Eight fuses are mounted on this PCB.

**DC fan motor**
The DC fan motor serves as a fan to cool the inside of the control box.
The filters at the ventilation holes in cover and the base plate should be cleaned about once a month.

**Conversion transformer** (Two types are available depending on the power supply voltage specifications.)
Steps-down the power supply voltage and generates the voltages that are required for each control operation.

**NF P. C. board (For Europe)**
Eliminates electrical noise that is transmitted along the power supply line.

**Panel PCB**
Secured inside the operation panel. This PCB controls indications of the machine status and the input operation.

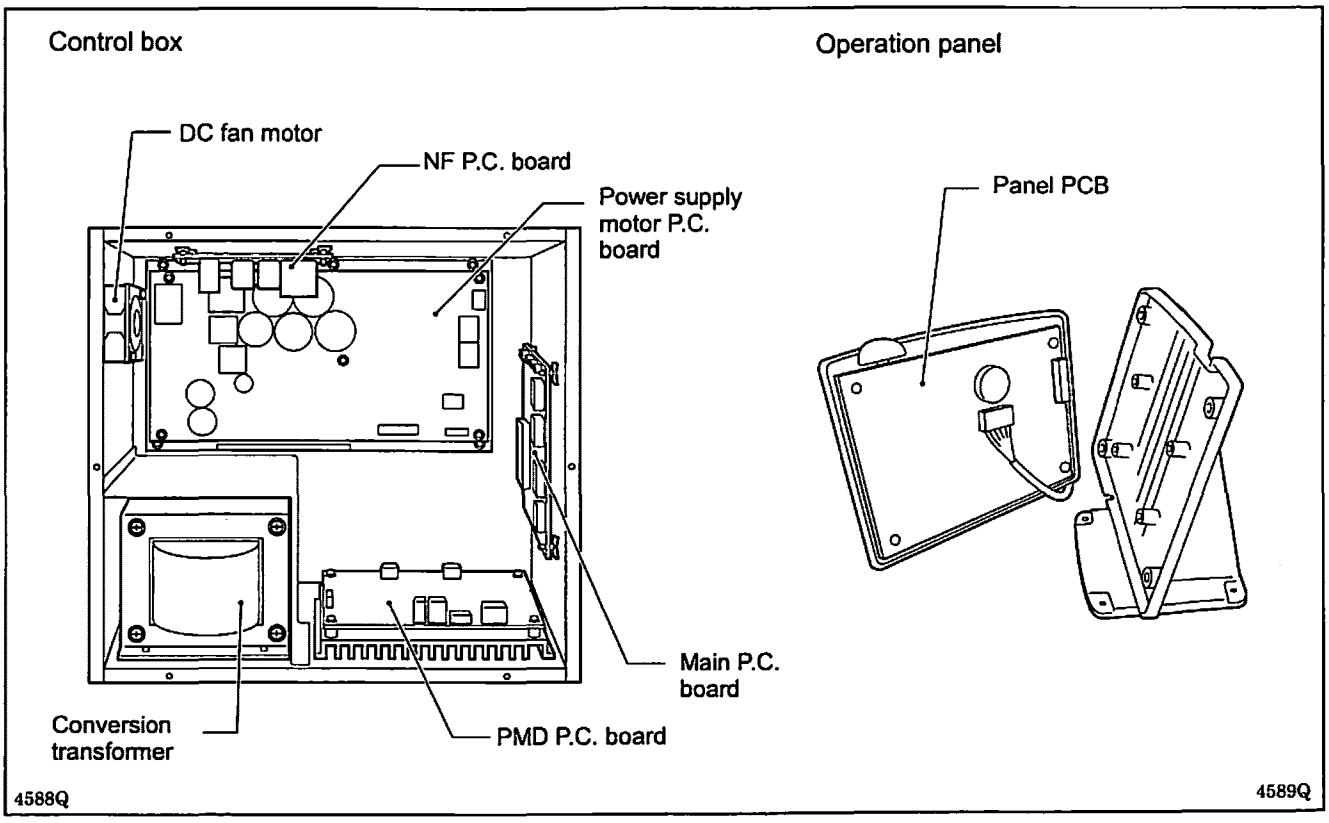

## 9-3. Fuse explanation

When replacing a fuse, be sure to use the specified ones listed below.
If a component on a PCB is damaged, a fuse may blow again immediately even when it has been replaced.

| No. | Part name | Part code | When a fuse has blown |
|---|---|---|---|
| F1 | Fuse 15AFB (glass tube fuse, 15A-250V) | SA3794-001 | The machine motor does not turn, and error E130 is displayed. |
| F2 | Fuse 6AFB (glass tube fuse, 6A-250V) | SA3759-001 | The feed mechanism does not operate, and error E201 or E211 is displayed. The work clamp does not operate, and error E300 is displayed. |
| F3 | Fuse 6AFB (glass tube fuse, 6A-250V) | SA3759-001 | The thread trimmer solenoid or tension release solenoid does not operate and thread trimming is disabled. |
| F4 | Fuse 3AFB (glass tube fuse, 3A-250V) | 616167-001 | Communication problem with PMD P.C. board and "E403" displayed. |
| F5 | Fuse 3AFB (glass tube fuse, 3A-250V) | 616167-001 | The power indicator is not illuminated, and nothing operates. |
| F6 | Fuse 3AFB (glass tube fuse, 3A-250V) | 616167-001 | The DC fan motor does not run, and error E740 is displayed. |
| F7<br>F8 | Fuse 15AFB (glass tube fuse, 15A-250V) | SA3794-001 | The power indicator is not illuminated, and nothing operates. |

Power supply motor P.C. board

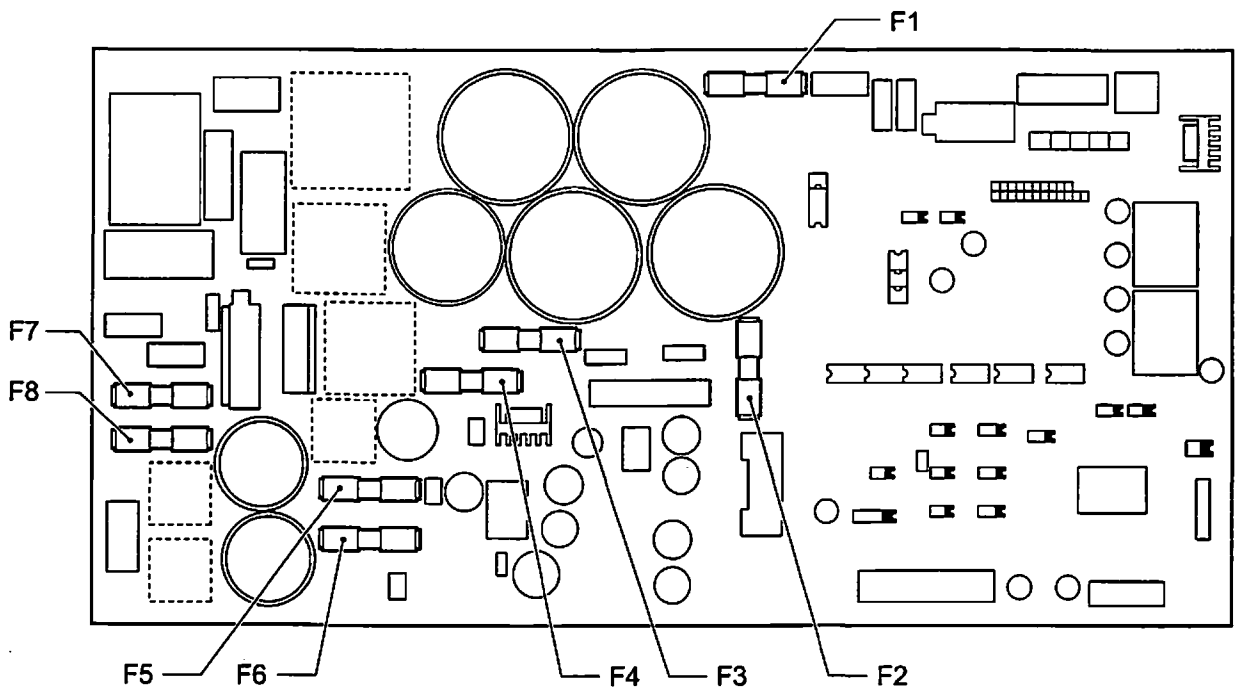


4590Q

## 9-4. Connectors

Most of the machine trouble is due to connector problems including improper connection or sufficient contact. Therefore, be sure to check if each connector is correctly inserted and that there is no contact failure between pins and wires before starting troubleshooting procedures.

### 9-4-1. Connector positions

**Main P. C. board**

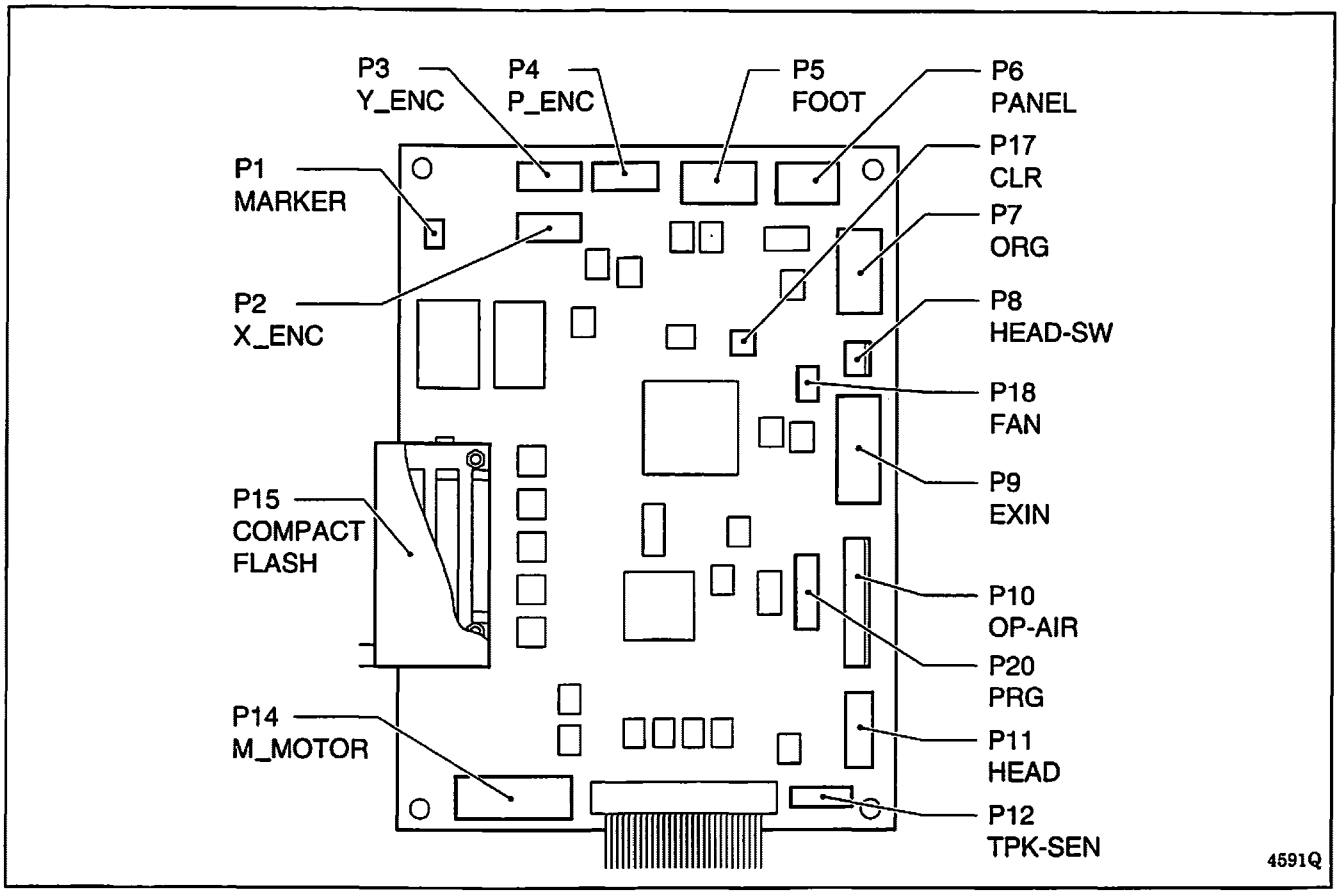


**PMD P. C. board**

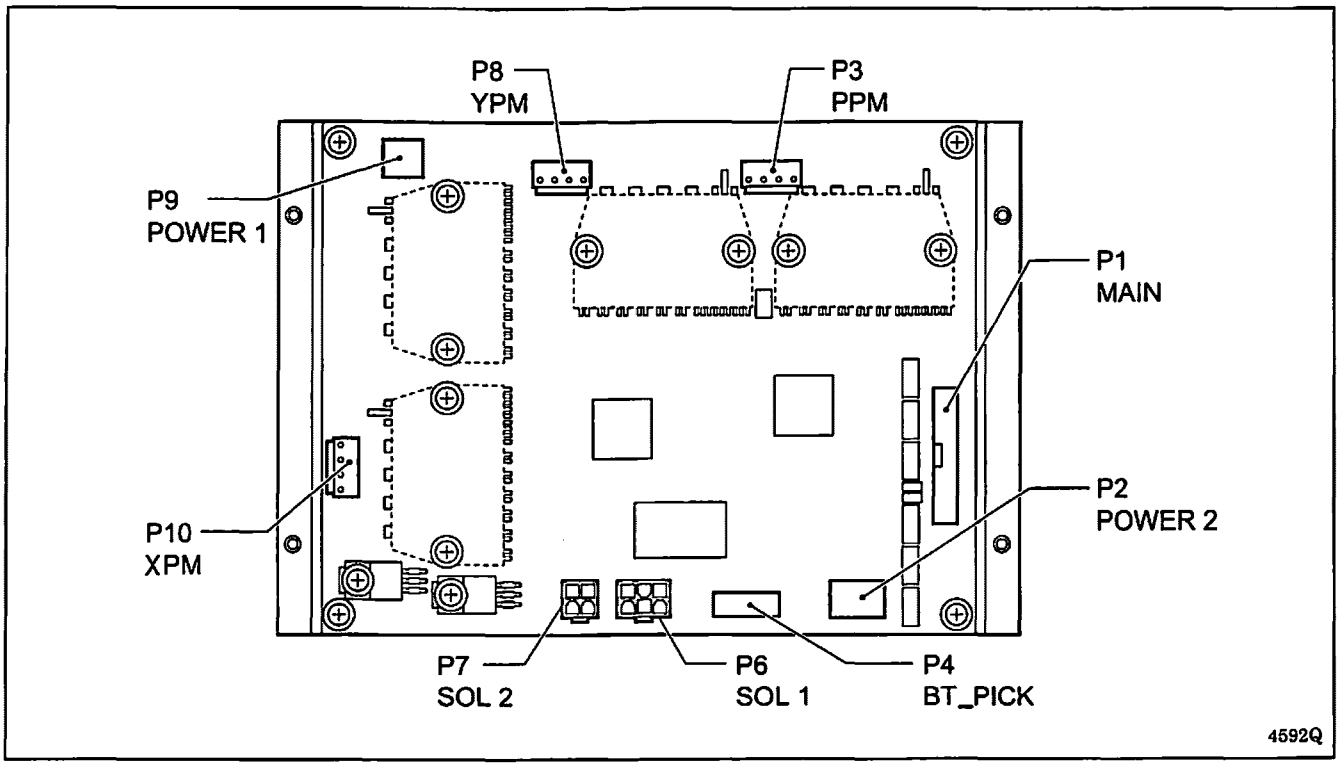

**Power supply motor P. C. board**

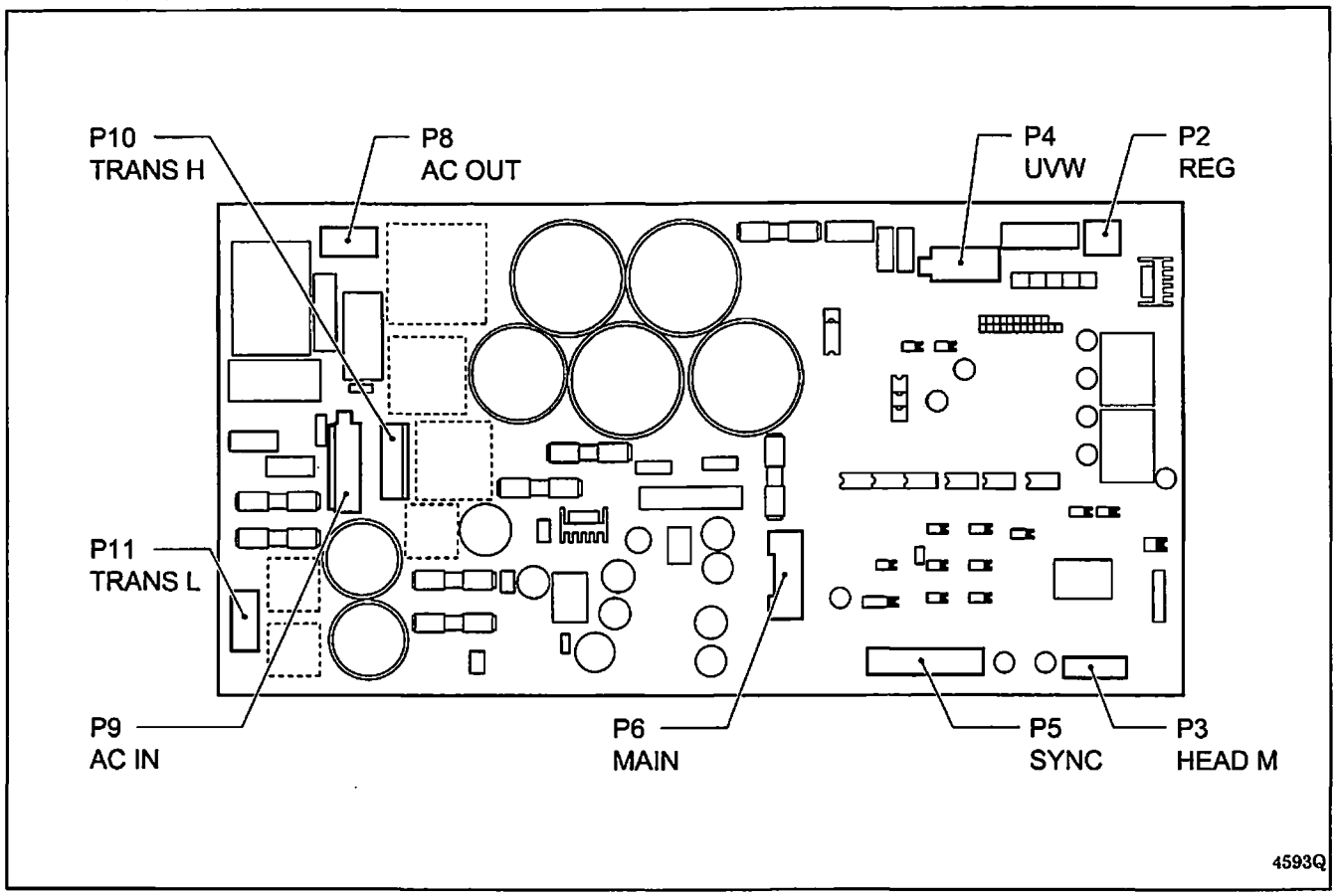


**Panel PCB**

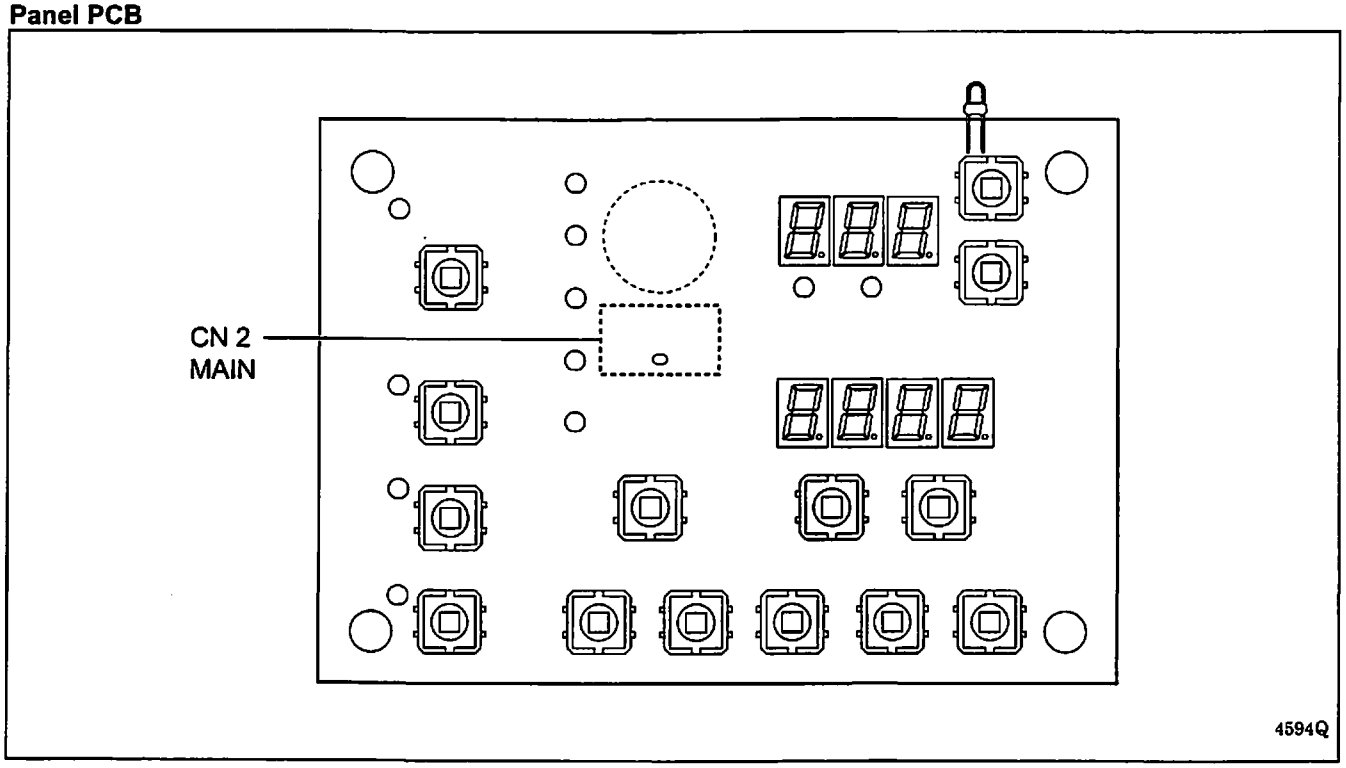

## 9-4-2. Contact failure

The connectors functions are divided into five categories. Some connectors may belong to more than one group. Be sure to investigate another category if a problem is not found in one category.

### Feed mechanism

| Problem | Connector No. and position |
|---|---|
| • The feed mechanism operates for a moment but the home position is not detected correctly.<br>• Error E200 or E210 is displayed. | 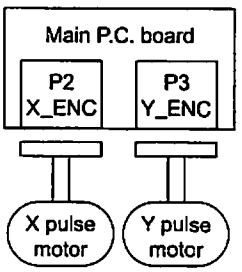 4707Q |
| • Forward feed does not operate correctly.<br>• Error E210 or E211 is displayed. | 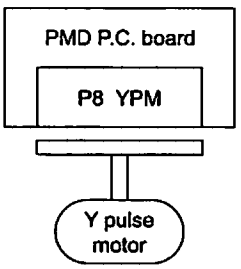 4708Q |
| • Sideways feed does not operate correctly.<br>• Error E200 or E201 is displayed. | 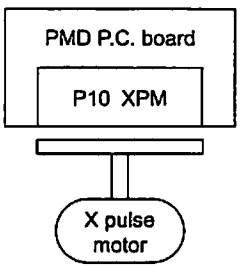 4709Q |
| • The feed motor does not operate.<br>• Error E200 is displayed. | 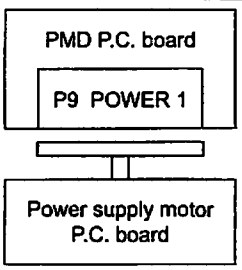 4710Q |

### Work clamp mechanism

| Problem | Connector No. and position |
|---|---|
| • The work clamp pulse motor rotates but the home position is not detected correctly.<br>• Error E300 is displayed. | 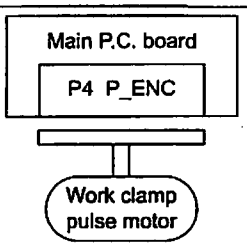 4711Q |
| • The work clamp pulse motor does not rotate correctly.<br>• Error E300 or E301 is displayed. | 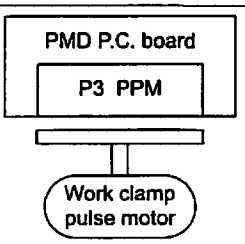 4712Q |

## Thread trimmer mechanism

| Problem | Connector No. and position |
|---|---|
| • Thread trimming is not performed. (There is no error display.) | 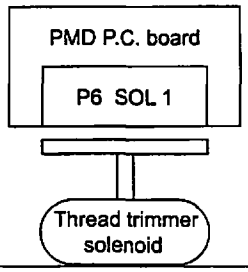 |
| • Tension release does not operate. (There is no error display.) | 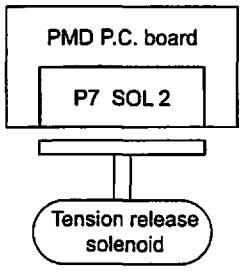 |
| • Error E690 is displayed. | 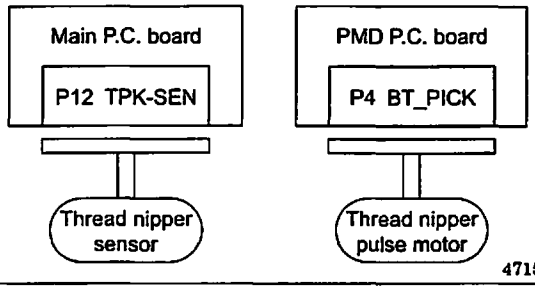 |

## Sewing operation

| Problem | Connector No. and position |
|---|---|
| • The power indicator is not illuminated, and nothing operates.<br>• Machine operation is unstable. | 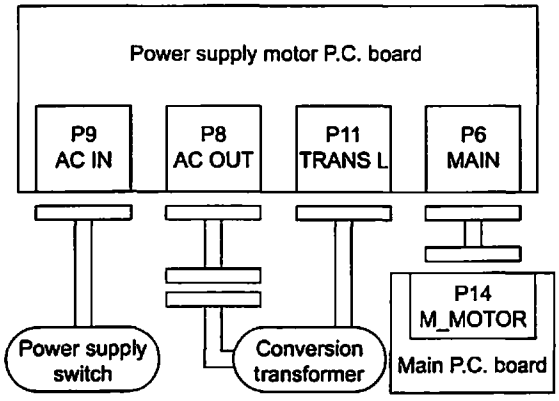 |
| • Error E403 is displayed when the power is turned on, and nothing operates. | 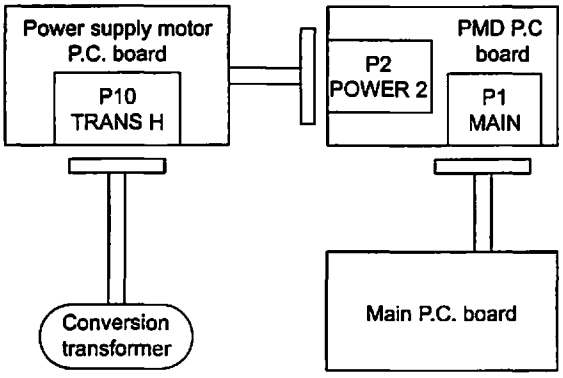 |

## Others

| Problem | Connector No. and position |
|---|---|
| • The DC fan motor does not run.<br>• Error E740 is displayed. | 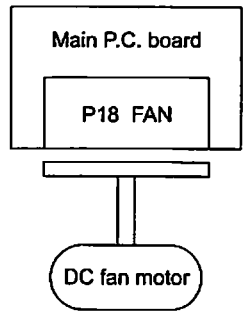 <br>4718Q |
| • Indication is strange.<br>• The power indicator is not illuminated.<br>• Any operation panel key does not have any effect. | 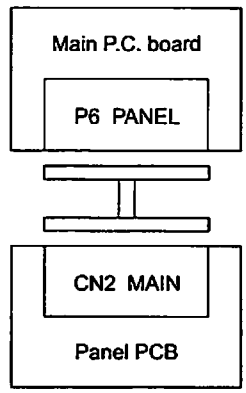 <br>4719Q |
| • The sewing machine does not operate when the foot switch is depressed. (No error display) | 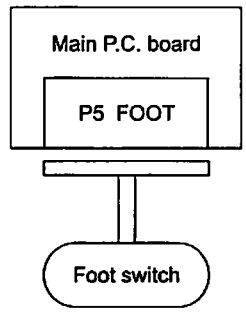 <br>4720Q |
| • Error E055 is displayed after the power is turned on. | 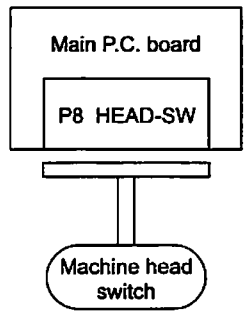 <br>4721Q |
| • Error E452 is displayed after the power is turned on. | 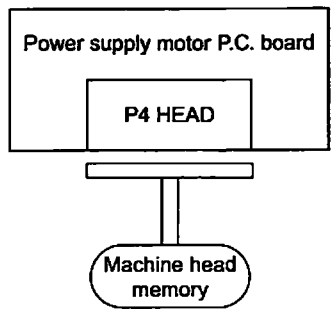 <br>4722Q |

# 10. TABLE OF ERROR CODES

## ⚠ DANGER

Wait at least 5 minutes after turning off the power switch and disconnecting the power cord from the wall outlet before opening the face plate of the control box. Touching areas where high voltages are present can result in severe injury.

If a malfunction should occur with the sewing machine, a buzzer will sound and an error code will appear in the display window. Follow the remedy procedure to eliminate the cause of the problem.

**Switch-related errors**

| Code | Cause and remedy |
|---|---|
| **E025** | Foot switch is depressed to the 2nd step.<br>Turn off the power and check the foot switch. |
| **E035** | Foot switch is depressed to the 1st step.<br>Turn off the power and check the foot switch. |
| **E050** | Machine head tilting was detected after the power was turned on.<br>Turn off the power, and then return the machine head to its original position.<br>Check that connector P8 on the main P.C. board is properly connected. |
| **E051** | Machine head tilting was detected while the sewing machine was operating.<br>Turn off the power, and then check that connector P8 on the main P.C. board is properly connected. |
| **E055** | Machine head tilting was detected after the power was turned on.<br>Turn off the power, and then return the machine head to its original position.<br>Check that connector P8 on the main P.C. board is properly connected. |
| **E065** | A switch on the operation panel was being pressed down when the power was turned on, or a switch is faulty.<br>Turn off the power and check the operation panel. |

**Upper shaft motor-related errors**

| Code | Cause and remedy |
|---|---|
| **E100** | Sewing machine has continued to be used for a certain period after the "GREASEUP" notification appears without the grease being applied (without the reset procedure being carried out).<br>Apply grease and then carry out the reset procedure. |
| **E110** | Needle up stop position error.<br>Turn the pulley to align the index mark with the needle up stop position. |
| **E120** | Needle down signal cannot be verified.<br>Turn off the power, and then check the synchronizer connection. |
| **E121** | Thread trimming was not completed.<br>Turn off the power, and then check if the cutting edges of the fixed knife and movable knife are damaged or worn. |
| **E130** | Problem with machine motor stopping, or synchronizer connection error.<br>Turn off the power, and then turn the machine pulley to check if the machine has locked up.<br>Check that connectors P4 and P5 on the power supply motor P.C. board are properly connected. |
| **E150** | Sewing machine motor has overheated or temperature sensor malfunction.<br>Turn off the power, and then check the machine motor.<br>(When sewing data with a small number of stitches (15 stitches or less) is sewn repeatedly (short cycle operation), the upper shaft motor may overheat and the "E150" error code may be generated.) |

**Feed mechanism-related errors**

| Code | Cause and remedy |
|---|---|
| **E200** | X feed motor home position cannot be detected. Problem with X feed motor or poor X home position sensor connection.<br>Turn off the power, and then check that connector P10 on the PMD P.C. board and connector P2 on the main P.C. board are properly connected. |
| **E201** | X feed motor stopped abnormally.<br>Turn off the power and check that there is no problem with the X feed direction. |
| **E202** | Problem with X feed motor or Y feed motor home position adjustment data.<br>Re-adjust the home position. |
| **E210** | Y feed motor home position cannot be detected. Problem with Y feed motor or poor Y home position sensor connection.<br>Turn off the power, and then check that connector P8 on the PMD P.C. board and connector P3 on the main P.C. board are properly connected. |
| **E211** | Y feed motor stopped abnormally.<br>Turn off the power and check that there is no problem with the Y feed direction. |

**Work clamp-related errors**

| Code | Cause and remedy |
|---|---|
| E300 | Work clamp home position cannot be detected. Problem with work clamp motor or poor work clamp home position sensor connection.<br>Turn off the power, and then check that connector P3 on the PMD P.C. board and connector P4 on the main P.C. board are properly connected. |
| E301 | Work clamp raised or lowered position cannot be detected.<br>Turn off the power, and check that there is no problem with the vertical work clamp position. |
| E303 | Problem with work clamp motor home position adjustment data.<br>Re-adjust the home position. |

**Communication and memory-related errors**

| Code | Cause and remedy |
|---|---|
| E401 | Connection communication error with power supply motor P. C. board detected when power was turned on.<br>Turn off the power, and then check that connector P6 on the power supply motor P.C. board and connector P14 on the main P.C. board are properly connected. |
| E403 | Connection error with PMD P. C. board detected when power was turned on.<br>Turn off the power, and then check that connector P1 on the PMD P.C. board and connector P13 on the main P.C. board are properly connected. |
| E410 | Communication error with main P. C. board detected.<br>Turn off the power and then back on again. |
| E411 | Communication error with power supply motor P. C. board detected.<br>Turn off the power and then back on again.<br>Check if the fuse F4 is blown or not. |
| E413 | Communication error with PMD P. C. board detected.<br>Turn off the power and then back on again. |
| E420 | CF card are not inserted. |
| E421 | Invalid program number or no data.<br>Change the program number. |
| E422 | Error occurred while reading the CF card.<br>Check the CF card data. |
| E424 | No free space on CF card.<br>Use a different CF card. |
| E425 | Error occurred while writing to the CF card.<br>Use the specified type of CF card. |
| E426 | R/W key has not been pressed.<br>Press the R/W key to read the data. |
| E430 | Data cannot be backed up to main P.C. board.<br>Turn off the power and then back on again. |
| E440 | Data memory error on main P.C. board.<br>Turn off the power and then back on again. |
| E450 | Model selection has not been loaded from the machine head memory.<br>Turn off the power and check that connector P3 on the power supply motor P.C. board is properly connected. |
| E451 | Data cannot be backed up to machine head memory.<br>Turn off the power and then back on again. |
| E452 | Machine head memory is not connected.<br>Turn off the power and check that connector P3 on the power supply motor P.C. board is properly connected. |
| E474 | Internal memory is full and copying is not possible.<br>Clear the sewing data, or use settings (memory switch No. 466 = ON) that do not copy the data to internal memory when sewing data is read. |

**Data editing-related errors**

| Code | Cause and remedy |
|---|---|
| E500 | The enlargement ratio setting caused the sewing data to extend outside the sewing area.<br>Set the enlargement ratio again. |
| E501 | Sewing data that exceeds the sewing machine's sewing area was loaded.<br>Check the size of the sewing data. |
| E502 | The enlargement ratio caused the data pitch to exceed the maximum pitch of 12.7 mm.<br>Set the enlargement ratio again. |
| E510 | Invalid code in sewing data.<br>If it is additional data, reread the data from the CF card. |
| E511 | No end code has been input into sewing data.<br>Input an end code, or change the program number. |
| E512 | Number of stitches exceeds allowed maximum. |
| E530 | Changing program number is prohibited. |

**Device-related errors**

| Code | Cause and remedy |
|---|---|
| E690 | Thread nipper home position error.<br>Turn off the power, and then clean underneath the needle plate to remove any dust and thread scraps.<br>Check that connector P12 on the main P.C. board is properly connected. |
| E691 | Thread nipper retract position error.<br>Check if the upper thread trailing length is too long.<br>Turn off the power, and then clean underneath the needle plate to remove any dust and thread scraps.<br>Check that connector P12 on the main P.C. board is properly connected. |

**P.C. board-related errors**

| Code | Cause and remedy |
|---|---|
| E700 | Abnormal rise in power supply voltage.<br>Turn off the power and check the input voltage. |
| E705 | Abnormal drop in power supply voltage.<br>Turn off the power and check the input voltage. |
| E710 | Abnormal current detected in sewing machine motor.<br>Turn off the power and check that there are no problems with the sewing machine. |
| E711 | Abnormal current detected in X-feed motor.<br>Turn off the power and check that there are no problems with the feed mechanism in the X-feed direction. |
| E712 | Abnormal current detected in Y-feed motor.<br>Turn off the power and check that there are no problems with the feed mechanism in the Y-feed direction. |
| E713 | Abnormal current detected in work clamp motor.<br>Turn off the power and check that there are no problems with the feed mechanism in the X-feed or Y-feed direction or with the work clamp lifter. |
| E740 | Cooling fan does not operate.<br>Turn off the power, and then check if the cooling fan is blocked with scraps of thread.<br>Check that connector P18 on the main P.C. board is properly connected. |

# 11. Segment display list

| 0 | 1 | 2 | 3 | 4 | 5 | 6 | 7 | 8 | 9 |
|---|---|---|---|---|---|---|---|---|---|
| A | B | C | D | E | F | G | H | I | J |
| K | L | M | N | O | P | Q | R | S | T |
| U | V | W | X | Y | Z | | | | |

brother®

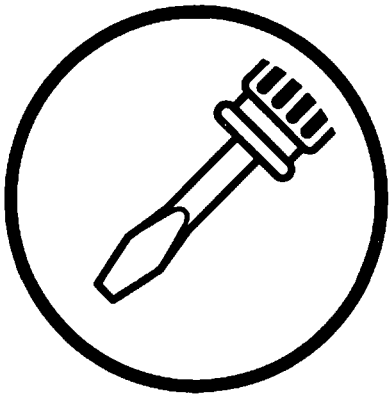

SERVICE MANUAL

**BROTHER INDUSTRIES, LTD.** http://www.brother.com/
15-1, Naeshiro-cho, Mizuho-ku, Nagoya 467-8561, Japan. Phone: 81-52-824-2177

Printed in Japan

KE-430D, BE-438D
I4050864H
2004.06. H (1)

SAFETY INSTRUCTIONS
SICHERHEITSHINWEISE
INSTRUCTIONS DE SECURITE
INSTRUCCIONES DE SEGURIDAD

brother®

# KE-430D, BE-438D

**This safety instruction manual is for EU countries.**
**Diese Sicherheitsanweisungen sind für die EU-Länder bestimmt.**
**Ce manuel des instructions de sécurité concerne les pays de l'Union Européenne.**
**Este manual de instrucciones de seguridad es para países de la Unión Europea.**
**本说明书仅适用于 EU(欧洲同盟国)。**

## 1. Warning label / Warnschild / Etiquette d'avertissement / Etiqueta de advertencia

* The following warning label appears on the sewing machine.
* An der Nähmaschine ist das folgende Warnschild angebracht.
* L'étiquette d'avertissement survante est fixée sur la machine à coudre.
* La siguiente etiqueta de advertencia se encuentra en la máquina.


## 2. Noise level and weight / Geräuschpegel und Gewicht / Niveau de bruit et poids / Nivel de ruido y peso

* Equivalent continuous A-weighted sound pressure level (L Aeq) at the workstation according to ISO 10821-CB M1 at maximum sewing speed and at continuous cycles without break time.
  The weight is that of the model with the heaviest specifications, and indicates the weight in the unpacked condition.
* Entspricht einem kontinuierlichen Schalldruckpegel (L Aeq) nach A bewertet bei der Werkstation nach ISO 10821-CB-M1 bei der maximalen Nähgeschwindigkeit und bei kontinuierlichem Nähzyklus ohne Ruhezeit.
  Das Gewicht ist für das Modell in der schwersten Ausführung ohne Verpackungsmaterial angegeben.
* Niveau de pression sonore pondéré à A continu équivalent (L Aeq) au poste de travail selon ISO 10821-CB-M1 à vitesse de couture maximale et en cycles continus sans coupure.
  Le poids est celui du modèle le plus lourd, et corresponde au poids de la machine sans son emballage.
* Nivel de presión de sonido promedio ponderado continuo equivalente (L Aeq) en el taller de costura de acuerdo a ISO 10821-CB-M1 con máxima velocidad de costura y con ciclos continuos sin tiempo de descanso.
  El peso es el de los modelos con las especificaciones más pesadas, e indica el peso sin embalaje.

| Model | L Aeq | Sewing speed | Weight |
|---|---|---|---|
| KE-430D | 85 dB | 3,200 rpm | 56 kg |
| BE-438D | 85 dB | 2,700 rpm | 56 kg |

SA3391-101
2005.08. ZB (1)

## 3. Ground connections / Erdungsanschlüsse / Connexions de mise à la terre / Conexiones a tierra

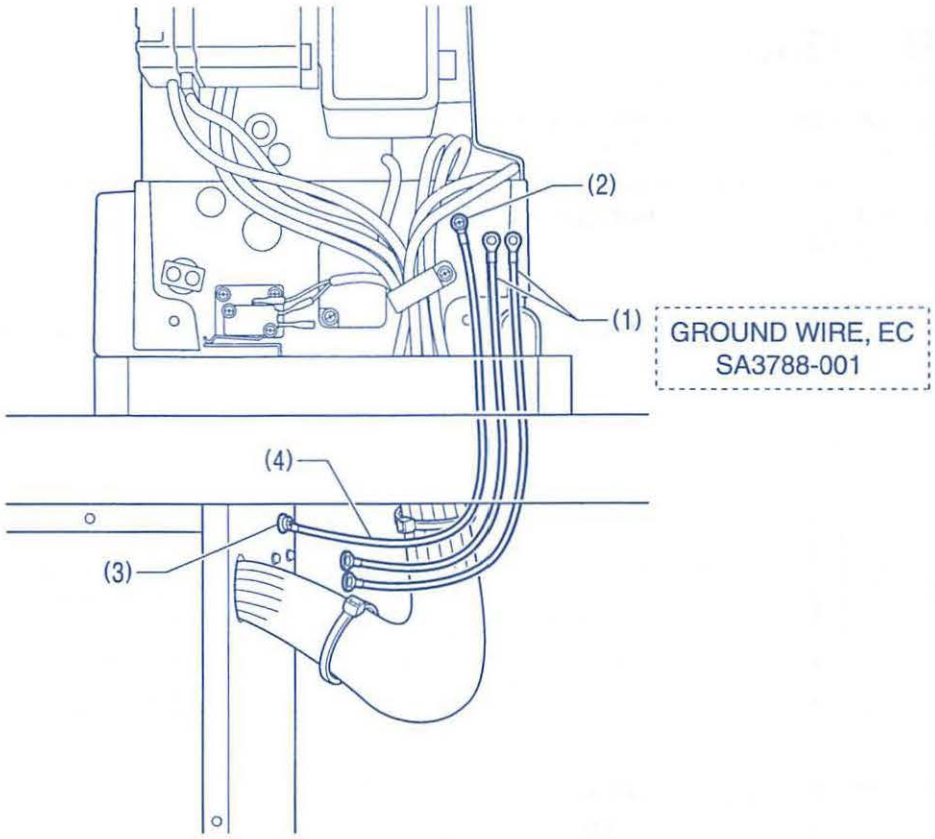


Secure the two ground wires (1) together with the ground wire (4) with the screws (2) and (3).
Befestigen Sie die Massekabel (1) zusammen mit dem Massekabel (4) mit dem Schrauben (2) und (3).
Fixer les deux fils de masse (1) ensemble avec le fil de masse (4) à l'aide des vis (2) et (3).
Asegure los dos cables a tierra (1) junto con el cable a tierra (4) con los tornillos (2) y (3).

## 4. Installing the noise reduction core / Anbringen der Geräuschdämpfungsschelle / Installation du centre de réduction de bruit / Instalación del reductor de ruidos

* Install the accessory core while referring to the illustration below.
* Bringen Sie die Kabelmuffe wie in der nachstehenden Abbildung gezeigt an.
* Installer le noyau des accessoires en se référant à l'illustration ci-dessous.
* Instalar el núcleo accesorio consultando el dibujo a continuación.

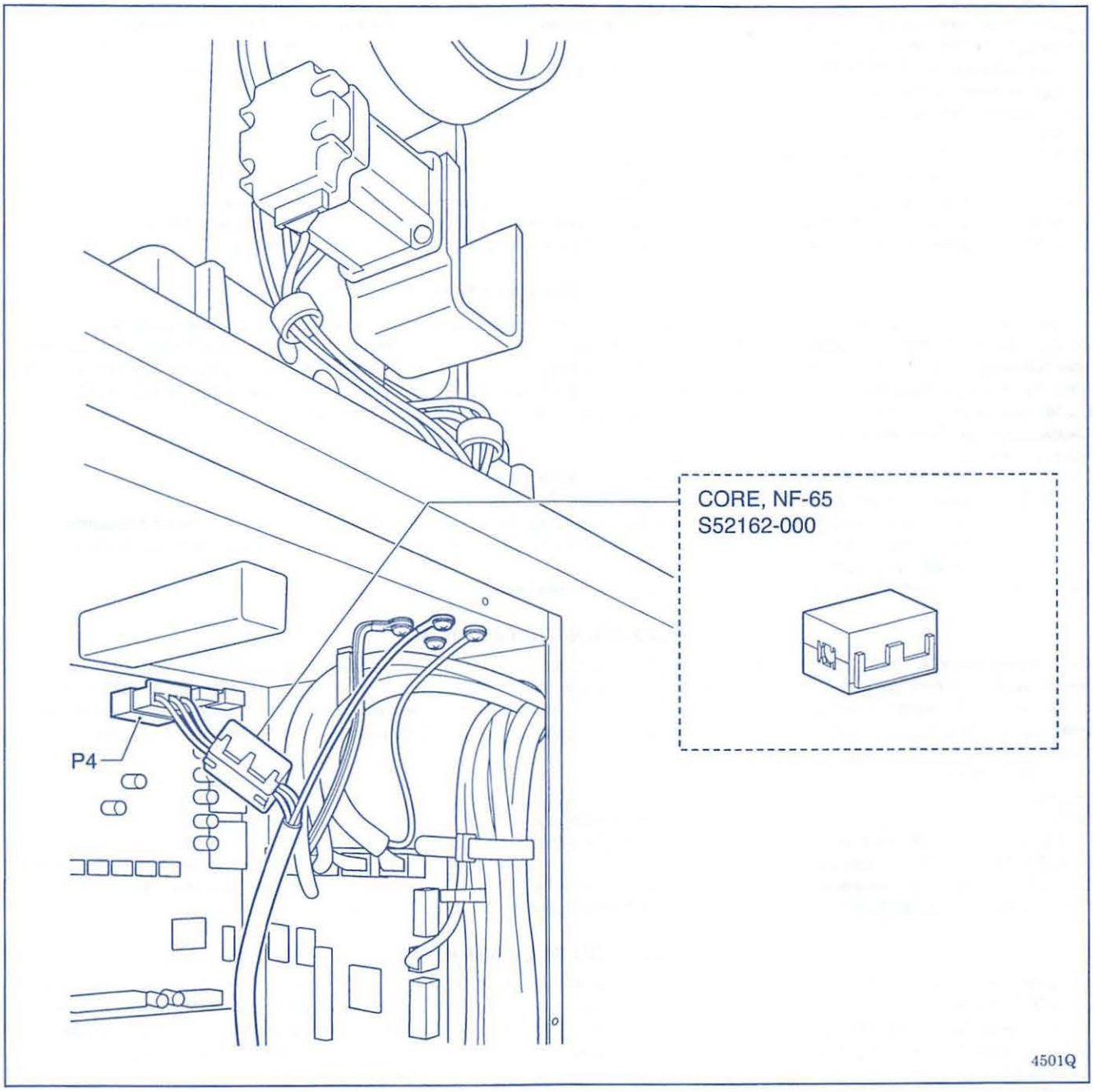

CE

brother®
BROTHER INDUSTRIES, LTD.
15-1, Naeshiro-cho, Mizuho-ku,
Nagoya, 467-8561 JAPAN

## MANUFACTURER'S DECLARATION

According to the EMC Directive 89/336/EEC, the EC Machinery Directive 98/37/EC, Appendix II B and the Low Voltage Directive 73/23/EEC we herewith declare that the constructions of the sewing machine heads and motors for **KE-430D** and **BE-438D** are intended for integration in sewing units and that they must not be taken into production until such time that it has been established that the sewing units into which they are integrated conform to the EMC Directive 89/336/EEC and the EC Machinery Directive 98/37/EC, Appendix II B, and the Low Voltage Directive 73/23/EEC.
Applied harmonized standards:
in particular

| | |
|---|---|
| EN 292-1 | Safety of machines, Basic terminology, method |
| EN 292-2 | Safety of machines, Technical directives and specifications |
| EN 60204-31 | Electrical equipment of machines Particular requirements for sewing machines, units and systems |
| EN 50081-1 | Electromagnetic compatibility Generic emission standard Part 1: Residential, commercial and light industry |
| EN 61000-6-2 | Electromagnetic compatibility Part 6-2: Generic standards. Immunity for industrial environments |

## HERSTELLERERKLÄRUNG

Im Sinne der EMC-Richtlinie 89/336/EEC, der EG-Maschinenrichtlinie 98/37/EC, Anhang II B, und der Niederspannungsrichtlinie 73/23/EEC erklären wir hiermit, daß die Ausführung der Nähmaschinenoberteile und der Motoren für **KE-430D, BE-438D** zum Einbau in Näheinheiten oder Nähanlagen bestimmt ist, und daß die Inbetriebnahme so lange untersagt ist, bis festgestellt wurde, daß die Näheinheiten oder Nähanlagen, in die diese Nähmaschinenoberteile eingebaut werden sollen, den Bestimmungen der EMC-Richtlinie 89/336/EEC und der EG-Maschinenrichtlinie 98/37/EC, Anhang II B, und der Niederspannungsrichtlinie 73/23/EEC entsprechen.
Angewendete harmonisierte Normen:
insbesondere

| | |
|---|---|
| EN 292-1 | Sicherheit von Maschinen. Grundsätzliche Terminologie, Methodik. |
| EN 292-2 | Sicherheit von Maschinen. Technische Leitsätze und Spezifikationen. |
| EN 60204-31 | Elektrische Ausrüstung von Industriemaschinen. Spezielle Anforderungen für Nähmaschinen, Einheiten und Systeme. |
| EN 50081-1 | Elektromagnetische Verträglichkeit Fachgrundnorm Störaussendung Teil 1: Wohnbereich, Geschäfts und Gewerbereiche sowie Kleinindustrie |
| EN 61000-6-2 | Elektromagnetische Verträglichkeit Fachgrundnorm Störfestigkeit Teil 6-2: Industriebereich |

## DECLARATION DU FABRICANT

Selon la Directive EMC 89/336/EEC, la Directive EC Machinery Directive 98/37/EC, Appendice II B, et la Directive 73/23/EEC de basse tension, nous déclarons par la présente que les têtes et les moteurs de machines à coudre industrielles **KE-430D** et **BE-438D** font partie d'unités de couture et qu'ils ne doivent être utilisés que si les unités de couture dans lesquelles ils sont intégrés ont bien été jugés conformes à la Directive EMC 89/336/EEC et à la Directive EC des machines 98/37/EC, Appendice II B, et la Directive 73/23/EEC de basse tension.
Normes harmonisés applicables:
En particulier

| | |
|---|---|
| EN 292-1 | Sécurité des machines, Méthode et terminologie de base |
| EN 292-2 | Sécurité des machines, Procédures et spécificités techniques |
| EN 60204-31 | Equipement Electrique des machines, Spécificités particulières pour les machines, les unités, et les systèmes de couture |
| EN 50081-1 | Compatibilité électromagnétique Norme générique emission Partie 1: Résidentiel, commercial, industrie légère |
| EN 61000-6-2 | Compatibilité électromagnétique Partie 6-2: Normes génériques. Immunité pour environnements industriels |

## DECLARACIÓN DEL FABRICANTE

De acuerdo con la Directiva EMC 89/336/EEC, la Directiva de maquinaria EC 98/37/EC, Apéndice II B y la Directiva de bajo voltaje 73/23/EEC, declaramos que las cabezas y los motores de máquinas de coser **KE-430D** y **BE-438D** fueron fabricadas para integrar a unidades de costura y no deben ser incorporadas a la producción hasta que se haya establecido que las unidades de costura cumplen con la Directiva EMC 89/336/EEC y la Directiva de maquinaria EC 98/37/EC, Apéndice II B, y la Directiva de bajo voltaje 73/23/EEC.
Aplicaciones estandar armonizadas:
En particular

| | |
|---|---|
| EN 292-1 | Seguridad de las máquinas, Terminología básica, metodo. |
| EN 292-2 | Seguridad de las máquinas, Directivas técnicas y especificaciones. |
| EN 60204-31 | Equipamientos electricos de maquinas, en particular para maquinas de coser, unidades y sistemas. |
| EN 50081-1 | Compatibilidad electromagnética emisión genérica standard Parte 1: Medio vivienda, comercio o ambiente eléctrico industrial |
| EN 61000-6-2 | Compatibilidad electromagnetica Parte 6-2: estandar generico, inmunidad para entornos industriales |

**BROTHER INDUSTRIES, LTD.**

Person in charge for Safety
Referent für Produktsicherheit
Responsable de la sécurité
Persona responsable de la seguridad

M. SHIMIZU Executive Vice President of Machinery & Solution Company

5, August, 2005